National Aeronautics and
Space Administration

GRC-CONN-REQ-0084
EFFECTIVE DATE: 02/23/2010

Communications, Navigation, and Networking reConfigurable Testbed (CoNNeCT) Project

National Aeronautics and Space Administration
John H. Glenn Research Center at Lewis Field, OH 44135

CoNNeCT PROJECT

SOFTWARE REQUIREMENTS SPECIFICATION

AUTHORIZED by CM when under FORMAL Configuration Control	
Date	**Signature**
04/15/2010	*/s/ James A. Drury*

Distribution:

[ ] NASA (U.S. Gov. Only) [ ] Project Only [ ] Government and Contractors

Availability:

[ ] Public (No Restriction) [ ] Export Controlled [ ] Confidential/ Commercial [ ] Internal Use Only

PREFACE

National Aeronautics and Space Administration (NASA) is developing an on-orbit, adaptable, Software Defined Radios (SDR)/Space Telecommunications Radio System (STRS)-based testbed facility to conduct a suite of experiments to advance technologies, reduce risk, and enable future mission capabilities on the International Space Station (ISS). The Communications, Navigation, and Networking reConfigurable Testbed (CoNNeCT) Project will provide NASA, industry, other Government agencies, and academic partners the opportunity to develop and field communications, navigation, and networking technologies in the laboratory and space environment based on reconfigurable, software defined radio platforms and the STRS Architecture. The CoNNeCT Payload Operations Nomenclature is "SCAN Testbed" and this nomenclature will be used in all ISS integration, safety, verification, and operations documentation. Also included are the required support efforts for Mission Integration and Operations, consisting of a ground system and the Glenn Telescience Support Center (GRC TSC). This document has been prepared in accordance with NASA Glenn's Configuration Management Procedural Requirements GLPR 8040.1 and applies to the CoNNeCT configuration management activities performed at NASA's Glenn Research Center (GRC). This document is consistent with the requirements of SSP 41170, Configuration Management Requirements, International Space Station, and Space Assurance and Requirements Guideline (SARG).

This document was prepared as a Software Requirements Specification per requirement SWE-109 of NPR 7150.2, "NASA Software Engineering Requirements". It defines the CoNNeCT Software end items, applicable documents, required characteristics, design and development requirements, computer resource requirements, personnel and training requirements, and characteristics of its subordinate elements. This specification also includes quality assurance provisions, and notes. The document was prepared using a combination of the Software Requirements Specification (SRS) Template GRC-SW-TPLT-SRS, found at Software@Glenn (http://software.grc.nasa.gov), and the CoNNeCT standard document template, CoNNeCT_General Plan template (Rev3).dot found in eRoom.

DOCUMENT HISTORY LOG

Status (Preliminary/ Baseline/ Revision/ Canceled)	Document Revision	Effective Date	Description
Preliminary	Draft	11/04/2008	Initial draft for SWRR
Preliminary	Update	08/04/2009	Preliminary for PDR
Baseline	–	02/23/2010	Baseline Version for CDR

SIGNATURE PAGE

Prepared By:

/s/ Denise M. Varga — *04/15/2010*

Denise Varga — Date
CoNNeCT Lead Software Integration Engineer
NASA Glenn Research Center

Concurred By:

/s/ Michael J. Barrett — *15APR2010*

Michael Barrett — Date
CoNNeCT Chief Engineer
NASA Glenn Research Center

/s/ Todd Tofil — *04-15-2010*

Todd Tofil — Date
CoNNeCT Lead Systems Engineer
NASA Glenn Research Center

/s/ Mark Luboski — *04/15/2010*

Mark Luboski — Date
CoNNeCT Software Product Assurance
ARES Corporation

Approved By:

/s/ Ann P. Over — *04/15/2010*

Ann P. Over — Date
CoNNeCT Project Manager
NASA Glenn Research Center

TABLE OF CONTENTS

1.0 INTRODUCTION 1
1.1 Scope 1
1.2 Identification 1
1.3 System Overview 2
1.4 Document Overview 5
2.0 REFERENCE DOCUMENTS 6
2.1 Reference Documents 6
2.2 Order of Precedence for Documents 7
3.0 REQUIREMENTS 8
3.1 Flight System States and Modes 9
3.2 Software Functional Requirements 10
3.2.1 Command and Control 10
3.2.2 Health & Status and Telemetry 12
3.2.3 Fault Management 13
3.2.4 RF Communications 14
3.2.5 GPS Operations 15
3.2.6 Experiments and Data 16
3.2.7 Time Synchronization 19
3.3 Software External Interface Requirements 20
3.3.1 Interface Identification and Diagrams 20
3.3.2 EXPRESS Logistics Carrier (ELC) Interface 21
3.3.3 RF Subsystem Interface 22
3.3.4 Space Network Interface 23
3.3.5 Near-Earth Network Interface 24
3.3.6 Huntsville Operations Support Center (HOSC) Interface 24
3.3.7 Antenna Pointing Subsystem Interface 25
3.4 Software Internal Interface Requirements 26
3.4.1 Internal Interface Identification and Diagrams 26
3.4.2 Payload Controller / GD SDR Interface 27
3.4.3 Payload Controller / JPL SDR Interface 28
3.4.4 Payload Controller / Harris SDR Interface 30
3.4.5 Payload Controller / Ground Software Interface 31
3.5 Software Internal Data Requirements 32
3.6 Adaptation Requirements 32
3.7 Safety Requirements 32
3.8 Security and Privacy Requirements 33
3.9 Environment Requirements 33
3.10 Computer Resource Requirements 34
3.10.1 Computer Hardware Performance and Timing Requirements 34
3.10.2 Computer Hardware Resource Utilization Requirements 34
3.10.3 Computer Software Requirements 35
3.10.4 Computer Communications Requirements 35
3.11 Software Quality Factors 36
3.12 Design and Implementation Constraints 36
3.13 Personnel-Related Requirements 36
3.14 Training-Related Requirements 36

3.15 Logistics-Related Requirements 37
3.16 Packaging Requirements 37
3.17 Precedence and Criticality of Requirements 37
4.0 REQUIREMENTS TRACEABILITY AND VERIFICATION METHODS 38
5.0 PARTITIONING FOR PHASED DELIVERY 54
APPENDIX A ACRONYMS AND ABBREVIATIONS 55
A.1 Scope 55
A.2 List of Acronyms and Abbreviations 55
APPENDIX B DEFINITIONS 57
B.1 Scope 57
B.2 List of Definitions 57
APPENDIX C TBDs 58
C.1 Scope 58
C.2 List of TBDs 58
APPENDIX D NPR 7150.2 Compliance Matrix for SWE-109 59
APPENDIX E REQUIREMENTS PRIORITIZATION 60

TABLE OF FIGURES

Figure 1.3-1—CoNNeCT Software Concept Diagram 3
Figure 1.4-1—CoNNeCT Software Requirements Flow-down 5
Figure 3.3.1-1—Software External Interfaces 20
Figure 3.4.1-1—Software Internal Interfaces 26

TABLE OF TABLES

Table 1.3-1—CoNNeCT CSCI Definition 4
Table 4-1—CoNNeCT Requirements Traceability and Verification Matrix 39
Table 4-2—CoNNeCT Flight Systems Requirements Traceability to Software 50
Table A-1—Acronyms 55
Table B-1—Definitions 57
Table C-1—TBDs 58
Table D-1—Traceability from SRS Template to SWE-109 of NPR 7150.2 59

1.0 INTRODUCTION

1.1 Scope

This document specifies the software requirements for the CoNNeCT payload avionics flight software and ground software. Requirements in this document trace to higher level project documents. The main programmatic and technical requirements flow down from the CoNNeCT Level 1 Requirements, CoNNeCT Systems Requirements Document, CoNNeCT Flight System Requirements Document, and CoNNeCT Ground System Requirements Document. The document hierarchy is described in Section 1.4.

Software Defined Radio (SDR) Software vs. Payload Avionics Software vs. Ground Software. The Software Defined Radio software is governed by the Software Defined Radio Functional Requirements Documents (GRC-CONN-REQ-0073, GRC-CONN-REQ-0074, and GRC-CONN-REQ-0075), which are subordinate to the Flight System Requirements Document. These documents also cover Waveform requirements.

This document addresses the Payload Avionics and Ground Software and their interfaces, including those to the SDR software. Verification of requirements for SDR software will occur according to their governing documents and not this document. Verification of the radio software with this document will be limited to the interfaces. All of the requirements allocated to the Payload Avionics Software and Ground Software specified in this document will be verified and validated as part of the formal Verification and Validation effort at Glenn Research Center (GRC). A requirements traceability matrix will show the flow-down of requirements from higher-level project documents through software requirements, architecture, design, code, test, and final verification and validation.

Phase I vs. Phase II Requirements. This document covers requirements for Phase I of CoNNeCT, which includes development of the payload and ground systems up through launch and on-orbit checkout. Phase II of CoNNeCT will cover experiment development, mission operations, and development of additional communications technologies in software. Phase II software requirements are covered in this document to the extent that the initial design does not preclude adding the intended software capabilities once on orbit. These requirements are designated by "[Phase II]" under the requirement number. Detailed Phase II requirements will be covered in a separate specification. Phase II capabilities specified in this document will be verified by analysis showing that the current design allows the capabilities to be implemented as part of Mission Operations.

1.2 Identification

This document establishes the highest (system) level software requirements for the Communications, Navigation, and Networking reConfigurable Testbed (CoNNeCT) System, both flight and ground. Requirements are then allocated to the subsystems containing software, which are the Payload Avionics Subsystem and the CoNNeCT Control Center (CCC). Figure 1.3-1 shows a diagram of the flight and ground subsystems containing software and the interconnections between them. Section 1.4 shows the document hierarchy depicting the flow-down of requirements.

1.3 System Overview

CoNNeCT is a combined spaceflight and ground system containing Software Defined Radios (SDRs) which implements the Space Telecommunications Radio Systems (STRS) Standard, provides risk reduction (Technology Readiness Level (TRL) advancement) for candidate Constellation and other NASA mission spaceflight hardware/software, and demonstrates advanced space communication systems critical to future NASA missions. CoNNeCT will be launched from Japan on the H-II Transfer Vehicle and transported to the International Space Station and installed on the Express Logistics Carrier (ELC) located on the exterior truss of the International Space Station (ISS). The system will be remotely operated from the CCC located in the Tele-science Support Center (TSC) at GRC.

CoNNeCT is being developed by multiple distributed organizations. Glenn Research Center has responsibility for managing the project, building the payload infrastructure and ground systems, and developing the S-band waveform for the Jet Propulsion Laboratory (JPL) radio. JPL has responsibility for developing the JPL SDR which operates in S-band and L-band (Global Positioning System (GPS)), for developing the GPS Waveform, and for delivering the Radio Frequency (RF) subsystem. General Dynamics (GD) is developing an SDR which operates in S-band. Harris has responsibility for developing the Harris SDR which operates in Ka-band. Goddard Space Flight Center (GSFC) is supplying the interface to the Near-Earth Network and Space Network for the Tracking and Data Relay Satellite System (TDRSS) and assisting GRC in developing the S-band waveform for the JPL radio. JSC has the role of evaluating ISS geometry and providing link availability to TDRSS. The CoNNeCT project is funded out of Headquarters through the Space Communications and Navigation (SCaN) Program in Space Operations Mission Directorate.

The software on CoNNeCT will be developed by all five organizations. Each SDR will have an Operating Environment (OE), which includes an operating system and provides infrastructure services to applications and waveforms. All three OEs must comply with the STRS standard. In addition to the OE, each SDR must run waveforms, which implement the capability of the radio to receive and transmit RF signals. These are the applications that run on the SDRs. GD and Harris will be responsible for developing both the OEs and the waveforms for their radios. GRC and GFSC will be responsible for developing the S-band waveform for operating the JPL radio. JPL will be responsible for developing the OE for their radio and a GPS L-band waveform during Phase II of the project. Other software, such as built-in-test code, diagnostics, and complex electronics code will also be developed for the radios by the respective developing organization.

The payload infrastructure will contain the payload avionics, including a single-board computer for processing commands, operating hardware, communicating with the radios and ELC, collecting sensor and telemetry data, sending telemetry to the ground, and performing data and file management. Software for this computer is the responsibility of GRC. GRC is also responsible for the software for ground systems at the CCC. This software will generate commands and display telemetry. As part of the CCC there will be a Ground Integration Unit (GIU) that will serve to verify flight software prior to uploading new software to the payload during the mission via command.

It is expected that there will be additional software required to operate the payload during environmental testing and system integration and test. Those requirements are not part of this document, but will be provided as part of the environmental test plan and integration and test plans.

Figure 1.3-1 depicts the flight and ground software on the different hardware platforms, identifies the responsible organization and characteristics of each. The green-shaded boxes represent the scope of this requirements document.

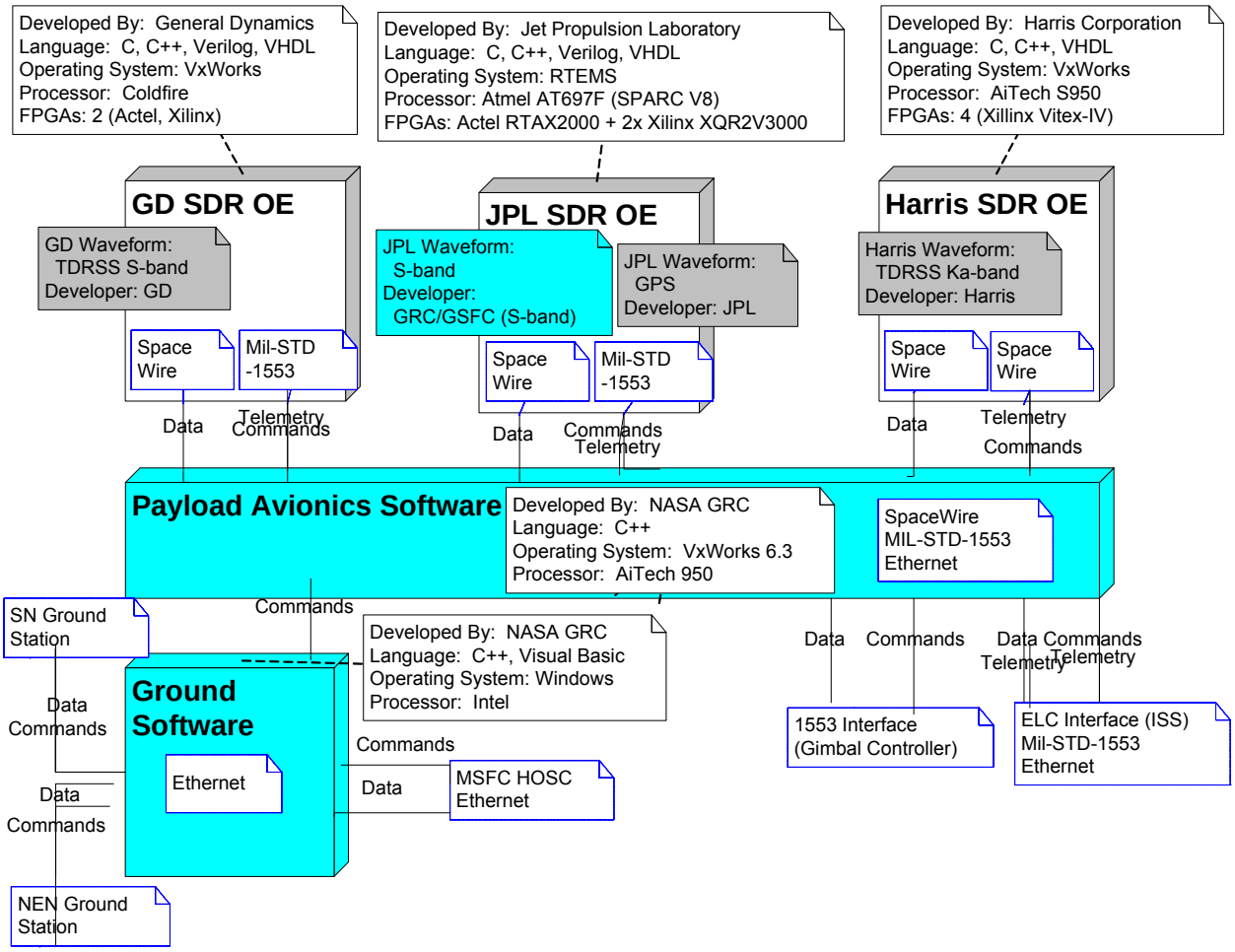

Legend

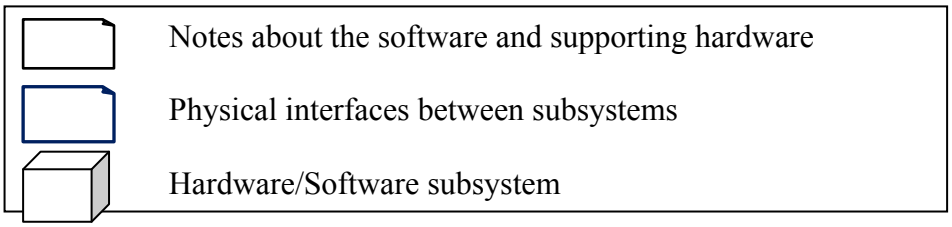

Figure 1.3-1—CoNNeCT Software Concept Diagram

The following table describes the Computer Software Configuration Items (CSCIs) that make up the CoNNeCT Software. Note that other software may developed in components such as boot ROMs and other radio-specific devices and those will be described in lower-level documents as opposed to here. The purpose of this CSCI definition is to allocate requirements to the first level of software decomposition. Note also that the Ground Integration Unit software is not considered a separate CSCI, as it will, by definition, run the same software as the flight unit. The shaded rows are not covered by this requirements document, but are covered by other documents.

Table 1.3-1—CoNNeCT CSCI Definition

ID	CSCI Name	Developer	Platform	Purpose
PAS	Payload Avionics Software	NASA GRC	Payload Avionics (AiTech S950 Single Board Computer)	Processes commands, data, and telemetry; commands SDRs; routes and stores experimental data; monitors system health; controls heaters; operates gimbals
GD OE	GD Operating Environment	GD	GD SDR (Coldfire Processor)	Process commands; control the configuration of the SDR; execute STRS-compliant Waveforms
GD WF	GD Waveform	GD	GD SDR	Operate the GD SDR as an S-band transceiver
JPL OE	JPL Operating Environment	JPL	JPL SDR (Amtel AT697F/Sparc V8 Processors)	Process commands; control the configuration of the SDR; execute STRS-compliant Waveforms
GGT WF	Glenn-Goddard TDRS Waveform	GRC, GFSC	JPL SDR	Operate the JPL SDR as an S-band transceiver
JPL WF	JPL Waveform [PHASE II]	JPL	JPL SDR	Operate the JPL SDR as an L-band receiver at L1, L2, and L3. [PHASE II]
HAR OE	HAR Operating Environment	Harris	Harris SDR (AiTech S950 Single Board Computer)	Process commands; control the configuration of the SDR; execute STRS-compliant Waveforms
HAR WF	HAR Waveform	Harris	HAR SDR	Operate the HAR SDR as a Ka-band transceiver
GSW	CoNNeCT Ground Software	GRC	CoNNeCT Control Center (Intel Processor)	Send commands to payload; receive data from payload; display payload telemetry and data; distribute data to Principal Investigator (PI); store data

1.4 Document Overview

This document contains all of the software requirements for the Payload Avionics Software and Ground Software as flowed-down from higher-level specifications and derived from higher-level requirements. A traceability matrix shows the parent requirement for each software requirement and allocation to each relevant subsystem. Some requirements trace to more than one subsystem. Each subsystem will decompose these requirements and document these lower-level requirements in a subsystem software requirements specification, along with hardware and internal interface requirements for that subsystem. The CoNNeCT SDR Platform Functional Requirements (GRC-CONN-REQ-0073, -0074, and -0075) contain software requirements for each of the SDRs and the GRC GSFC TDRSS Waveform Requirements (GRC-CONN-REQ-0077) contains requirements for the S-band Waveform for the General Dynamics SDR. All interface requirements must be verified as part of the Software Verification and Validation process.

Figure 1.4-1 shows the flow-down of requirements from higher-level project documents to lower-level specifications. This document exists at level 4.

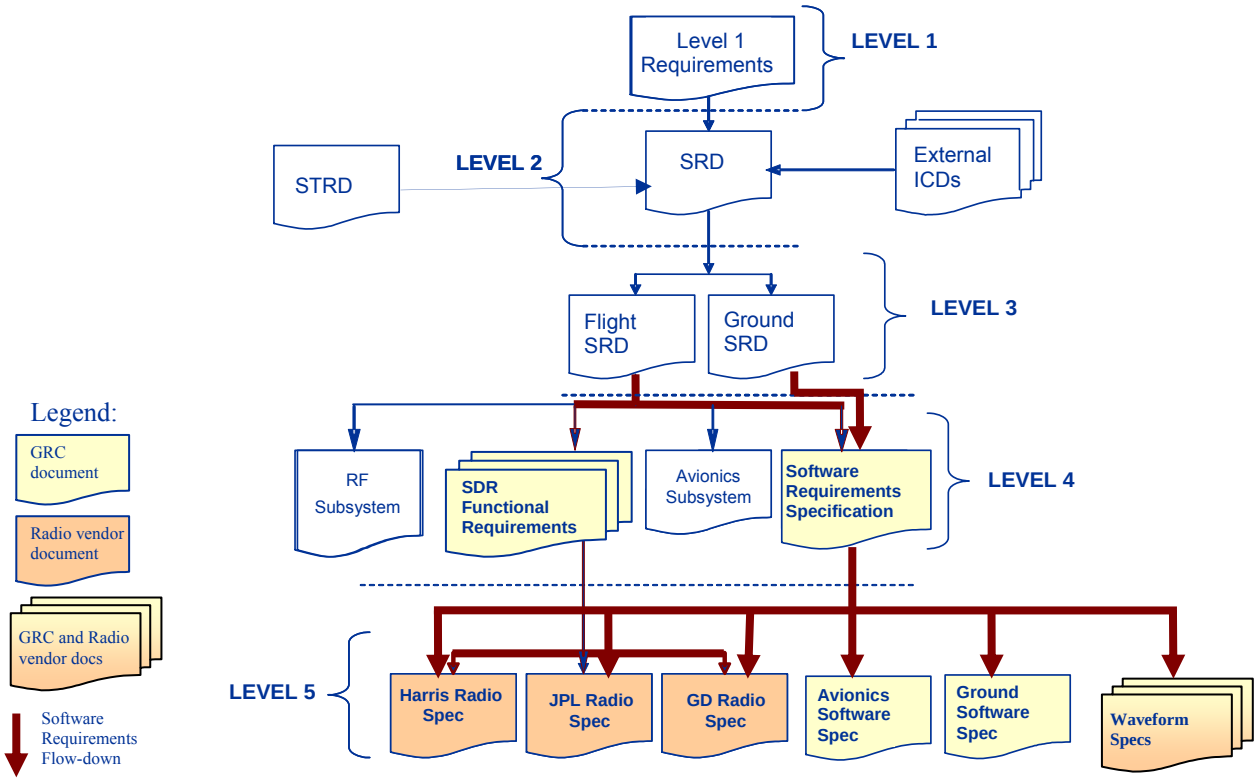

Figure 1.4-1—CoNNeCT Software Requirements Flow-down

2.0 REFERENCE DOCUMENTS

This section lists the NASA/Government and non-NASA/Government specifications, standards, guidelines, handbooks, or other special publications applicable to the application of this document.

2.1 Reference Documents

Reference documents are those documents that, though not a part of this document, serve to clarify the intent and contents of this document.

Document Number	Title
452-NENUG-GN, February 2001?	Near-Earth Network User's Guide (NENUG)
CCSDS 701.0−B−2	Advanced Orbiting Systems, Network and Data Links: Architectural Specification, Blue Book
CXP-70022, Volumes 1 - 5, Revision B, February 20, 2008	Constellation Program Command, Control, Communication, and Information (C3I) Interoperability Specification
D684−10056−01	Space Station Software Standards and Procedures Specification (SSPS)
DUDG10351000-14	Gimbal Controller Electronics User Guide
GLPR 7150.1	GRC Software Engineering Requirements
GRC-CONN-ICD-0023 Vol. 3	GD Platform Interface Control Document
GRC-CONN-ICD-0023 Vol. 4	GD Waveform Interface Control Document
GRC-CONN-ICD-0030 Vol. 3	JPL STRS OE Interface Control Document
GRC-CONN-ICD-0030 Vol. 5	JPL Bootcode Interface Control Document
GRC-CONN-ICD-0058	Radio Frequency (RF) Subsystem Interface Control Document
GRC-CONN-ICD-0090 Vol. 2	Harris Interface Control Document
GRC-CONN-LIST-0064	Payload Avionics Section Instrumentation List
GRC-CONN-PLAN-0001	CoNNeCT Software Configuration Management Plan
GRC-CONN-PLAN-0006	CoNNeCT Product Assurance Plan (Section 10, SW Assurance)
GRC-CONN-PLAN-0024	CoNNeCT Software Management and Development Plan
GRC-CONN-REQ-0019	CoNNeCT Level 1 Requirements
GRC-CONN-REQ-0025	CoNNeCT Science and Technology Requirements Document
GRC-CONN-REQ-0073	GD Software Defined Radio Functional Requirements
GRC-CONN-REQ-0074	JPL Software Defined Radio Functional Requirements
GRC-CONN-REQ-0075	Harris Software Defined Radio Functional Requirements
GRC-CONN-REQ-0077	GRC GSFC TDRSS Waveform Requirements
GRC-CONN-SPEC-0032	TWTA Functional Specification
GRC-CONN-SRD-0013	CoNNeCT Systems Requirements Document
GRC-CONN-SRD-0035	CONNECT Flight System Requirements Document
GRC-CONN-SRD-0036	CoNNeCT Ground Segment System Requirements Document
GRC-SW-TPLT-SRS	Software Requirements Specification Template
IETF STD-0005	Internet Engineering Task Force, Internet Protocol (IP)
IETF STD-0006	Internet Engineering Task Force, User Datagram Protocol (UDP)
IETF STD-0007	Internet Engineering Task Force, Transmission Control Protocol (TCP)
MIL-STD-1553B	Department Of Defense Interface Standard for Digital Time Division Command/Response Multiplex Data Bus

Document Number	Title
NPR 7150.2	NASA Software Engineering Requirements
SNUG-450, Rev 9	Space Network User's Guide (SNUG)
SSP 41175-02 Rev H	Software Interface Control Document, Station Management and Control to International Space Station, General Software Interface Requirements
SSP 52050 Rev G	Software Interface Control Document Part 1, International Standard Payload Rack to International Space Station
SSP 53112 (draft)	CoNNeCT Payload Interface Control Document (ICD)
SSP 57002 Rev D	Payload Software Interface Control Document Template
SSP 57003-ELC	Attached Payload Interface Requirements Document - EXpedite the PRocessing of Experiments to Space Station (EXPRESS) Logistics Carrier (ELC) Cargo Interface Requirements

2.2 Order of Precedence for Documents

In the event of a conflict between this document and other documents specified herein, the requirements of this document shall apply. In the event of a conflict between this document and higher level documents, the higher level documents shall take precedence over this document.

All documents used, applicable or reference, are to be the issues defined in the *CoNNeCT Project Plan* (GRC-CONN-PLAN-0004). Nothing in this document supersedes applicable laws and regulations unless a specific exemption has been obtained.

3.0 REQUIREMENTS

The following sections contain the requirements for the CoNNeCT Payload Avionics and Ground software. Each section has a set of requirements, with each requirement definition containing a) the identification of a parent requirement, b) requirement identifier, c) requirement text, d) requirement rationale, and e) allocation to one or more CSCIs. Traceability from the parent requirement all the way down to the verification test will be kept in a separate Requirements Traceability Matrix. Section 4 of this document identifies the verification methods that will be used for each requirement.

Each requirement will be given a unique ID containing the letters "SRS-", followed by the section number and a sequential number starting with 1 appended to the section number. For instance, the first requirement in Section 3.2 will be "SRS-3.2.1". The tenth requirement from Section 3.3 will be "SRS-3.3.10". Safety critical requirements will be designated with the word "Safety" appended, such as "SRS-3.3.10-Safety".

The following identifiers will be used to refer to the parent documents in the "Parent Requirement" column for requirements:

- **FSRD** CoNNeCT Flight System Requirements Document, GRC-CONN-SRD-0035
- **GSRD** CoNNeCT Ground Segment System Requirements Document, GRC-CONN-SRD-0036

Since there is no crew operations for CoNNeCT, all commands will come from the Ground Systems in the CoNNeCT Control Center. This will also be the destination for all operational data, which includes telemetry, health & status, and data, both from the HOSC and the ground stations. Therefore, the Ground Software must implement functionality in these areas and this is the basis for allocation of requirements to Ground Software in the absence of the Ground Systems Requirements Document.

Requirements slated for implementation during Phase II of the project will have this designation ([Phase II]) underneath the SRS requirement number. In addition, the entire set of requirements has been prioritized by the Software Team. A column indicating the priority occurs in each requirement table. The priorities that have been defined are:

- **P1** = must have at launch; supports incompressible test list
- **P2** = should have at launch; supports mission success criteria
- **P3** = can defer; including all Phase II requirements, but not the underlying capability to support implementation of these requirements

See **Appendix E** for a definition of the capabilities in each of these categories and the "incompressible test list" for software.

3.1 Flight System States and Modes

The following requirements imply system states or modes that could drive system design. These states will be defined in the CoNNeCT System Modes and States document, GRC-CONN-DOC-0152. How these states affect and interact with other flight elements will be detailed in the Software Design Document.

Parent Req.	Req. ID	Requirement Text and Rationale	Prior -ity	Allocated To
FSRD-5534	SRS-3.1.1	The Software **shall** initialize the system to a known configuration. *Rationale: Need to have a prescribed, safe state upon power-up.*	P1	PAS
FSRD- 3684 FSRD-6962 thru FSRD-6994 GSRD-TBD	SRS-3.1.2	The Software **shall** operate SDRs in the combinations and configurations specified in FSRD Table 3.2.2.1-1, "CoNNeCT Operational Configurations". *Rationale: The software must be able to configure the system to handle all the different valid simultaneous combinations of SDR operations at various data rates and simplex/duplex transmission.*	P1	PAS, GSW
FSRD-7069	SRS-3.1.3	The Software **shall** implement modes and states per the CoNNeCT System Modes and States document, GRC-CONN-DOC-0152. *Rationale: System modes and states are used to define system operations and coordination between flight and ground.*	P1	PAS, GSW

3.2 Software Functional Requirements

These paragraphs contain requirements for implementing the functional capabilities of the CoNNeCT Software System.

3.2.1 Command and Control

Command and Control is the mechanism by which experiments are run and hardware is operated from the ground. Commands originate from the CoNNeCT Control Center on the ground and are transmitted to the payload for processing. Within the payload, commands are created and sent from one subsystem to another, based on the commands received from the ground.

Parent Req	ReqID	Requirement Text and Rationale	Prior -ity	Allocated To
FSRD-1708 GSRD-TBD	SRS-3.2.1.1	The Software shall implement commanding over the primary path per the Command and Telemetry Databook, GRC-CONN-DBK-0128. Rationale: The CoNNeCT Control Center will generate commands and send them to the CoNNeCT payload via the ISS 1553 interface.	P1	PAS, GSW
FSRD-1704 GSRD-TBD	SRS-3.2.1.2	The Software **shall** implement commanding over the experimental path per the Command and Telemetry Databook, GRC-CONN-DBK-0128. *Rationale: The CoNNeCT payload must interpret and act on commands received through the SDR data interface.*	P3	PAS, GSW
FSRD-6008	SRS-3.2.1.3	The Software **shall** control subsystem power via discrete signals per the Payload Avionics Section Instrumentation List, GRC-CONN-LIST-0064. *Rationale: The method of powering on the SDRs and other components will be by discrete signals.*	P1	PAS
FSRD-1569 GSRD-TBD	SRS-3.2.1.4	The Software **shall** control movement of the Ka-band and medium gain S-band Antennas over the MIL-STD-1553 data interface with the gimbal motor controller per the gimbal controller electronics user guide, DUDG10351000-14. *Rationale: Gimbals will be used to move the antenna assembly. The gimbal controller electronics has a MIL-STD-1553 data interface. The ground will send up preplanned tracking information.*	P1	PAS, GSW

Parent Req	ReqID	Requirement Text and Rationale	Prior -ity	Allocated To
FSRD-5491	SRS-3.2.1.5	The Software **shall** control subsystem temperature when the Payload Avionics is powered. *Rationale: The Payload Avionics is responsible for maintaining temperature of the subsystems during the operational states of the payload. When Payload Avionics is un-powered, temperature control is provided by external heaters controlled via the ELC.*	P1	PAS
GSRD-TBD	SRS-3.2.1.6	The Software **shall** provide a command interface to operations personnel to generate and send commands from the CoNNeCT Control Center. *Rationale: All commanding of CoNNeCT will be initiated from the ground at the CoNNeCT Control Center.*	P1	GSW
FSRD-3109 FSRD-3111 FSRD-6670 GSRD-TBD	SRS-3.2.1.7	The Software **shall** reprogram the following reprogrammable devices during flight: payload avionics S950 processor, SDR processors, and reprogrammable fixed programmable gate arrays (FPGAs) for all SDRs. *Rationale: A key capability of SDR technology is being able to modify the functionality of the radios via software updates. This is a key requirement for CoNNeCT and is critical for launch capability. Payload Avionics Software will need to be updated to add new data processing functionality, and new commands and telemetry to accommodate new Waveforms.*	P1	PAS, GSW

3.2.2 Health & Status and Telemetry

Health & Status data is defined by the project and consists of the payload parameters that ISS should monitor to assess the health of the payload. This data is also part of the larger Telemetry data set that consists of all engineering data being collected and downloaded by the payload. Telemetry may be downlinked via either the ELC 1553 or Ethernet interface via ISS. As part of an experiment, Telemetry may also be downlinked via the experimental (RF) path. A complete list of Health & Status and Telemetry is defined in the Command and Telemetry Databook, GRC-CONN-DBK-0128.

The baseline for implementing ground telemetry display at the CCC in the TSC is the Tele-science Resource Kit (TReK). This software is available from the Marshall Space Flight Center (MSFC) Payload Operations Control Center upon registration.

Parent Req.	Req. ID	Requirement Text and Rationale	Prior -ity	Allocated To
FSRD-1217 FSRD-1218 FSRD-3193 FSRD-3194 FSRD-3195	SRS-3.2.2.1	The Software **shall** collect engineering data at a minimum rate of once per second as defined in the CoNNeCT Command and Telemetry Data Book GRC-CONN-DBK-0128. *Rationale: The CoNNeCT payload is responsible for collecting data that represents the health of the CoNNeCT subsystems. Each SDR is expected to collect its own internal health data and report that to the payload or ground.*	P1	PAS
FSRD-3193 FSRD-3194 FSRD-3195 FSRD-3202 FSRD-3213 FSRD-3214 FSRD-3215 GSRD-TBD	SRS-3.2.2.2	The Software **shall** downlink engineering data containing the health and status monitoring of the Flight System for downlink via ISS. *Rationale: The health and status must be downlinked to the ground and processed at the CCC. The primary path for downlink is via ISS.*	P1	PAS, GSW
FSRD-3200	SRS-3.2.2.3	The Software **shall** provide telemetry data parameters to the Ground System at least once per minute during an experiment period. *Rationale: Telemetry will be downlinked as it is received and will likely exceed this requirement. During LOS, this may not be possible.*	P2	PAS, GSW

Parent Req.	Req. ID	Requirement Text and Rationale	Prior -ity	Allocated To
FSRD-3021 GSRD-TBD	SRS-3.2.2.4	The Software **shall** downlink engineering data containing the health and status monitoring of the Flight System for downlink via the experimental path. *Rationale: The health and status must be downlinked to the ground and processed at the CCC. The experimental path for downlink is via RF transmissions through the radios.*	P3	PAS, GSW

3.2.3 Fault Management

Fault management is the ability of the software to detect problems in the system, isolate the cause, and initiate recovery activities. Part of fault management is monitoring data values and checking for out of bound values. Information concerning fault management must be available to ground operations personnel. Software is also expected to protect flight hardware when possible if fault conditions have the potential to disable system components which are critical to running experiments.

Parent Req.	Req. ID	Requirement Text and Rationale	Prior -ity	Allocated To
FSRD-1222 FSRD-5530 FSRD-6596 GSRD-TBD	SRS-3.2.3.1	The Software **shall** monitor engineering data and take specified action per CoNNeCT System Command and Telemetry Data Book, GRC-CONN-DBK-0128 and the Fault Detection, Isolation, and Recovery (FDIR) Report. *Rationale: This requirement implies that there are certain faults or conditions that the software must automatically react to, without operations personnel action, in order to save hardware. An example might be an overheating condition which would require power-down of certain subsystems. These conditions are defined in* GRC-CONN-DBK-0128.*The FDIR Report will describe actions to be taken when faults are detected. Some of these actions may be on the ground.*	P1	PAS, GSW

Parent Req.	Req. ID	Requirement Text and Rationale	Prior -ity	Allocated To
FSRD-3198 GSRD-TBD	SRS-3.2.3.2	The Software **shall** provide the error log from each SDR to the ground upon request. *Rationale: Error logs will be required for troubleshooting. A command to retrieve these files will allow this data to be downlinked when required.*	P2	PAS, GSW

3.2.4 RF Communications

The interfaces for communicating with TDRSS and direct-to-ground via RF communications are primarily with radios. The Payload Avionics Software and the Ground play a large role in maintaining contact with TDRSS.

Parent Req.	Req. ID	Requirement Text and Rationale	Prior -ity	Allocated To
FSRD-1569 GSRD-TBD	SRS-3.2.4.1	The Software **shall** track any assigned TDRS during Ka-band and medium rate S-band operations and whenever antennas on the gimbals are being used. *Rationale: The PAS will control the gimbal to track TDRS. The GSW may send the commands with current TDRS location. The software needs to allow for tracking any existing or future TDRS, so should not hardcode to any particular satellite designation.*	P2	PAS, GSW

3.2.5 GPS Operations

The only requirements understood at this time for GPS are to collect, store, and downlink telemetry generated by the JPL SDR.

Parent Req.	Req. ID	Requirement Text and Rationale	Prior -ity	Allocated To
FSRD-3675	SRS-3.2.5.1	The Software shall collect, store, and downlink data from five GPS SDR experiment sessions per day, each lasting a minimum of 30 minutes. Rationale: This requirement dictates data collection over JPL Spacewire, onboard file creation and storage, and file downlink to CCC.	P3	PAS
FSRD-3677 FSRD-6672	SRS-3.2.5.2	The Software shall collect, store, and downlink data from two GPS SDR experiment sessions every 60 days, each lasting a minimum of 48 hours. Rationale: This requirement dictates data collection over JPL Spacewire, onboard file creation and storage, and file downlink to CCC.	P3	PAS

3.2.6 Experiments and Data

This section contains requirements for the experiments that will be run on CoNNeCT and for data collection from experiments. Note that not all of these capabilities need to be implemented in experiments prior to launch, but the CoNNeCT software must provide a framework that allows these capabilities to be exercised at some point during operations.

Parent Req	ReqID	Requirement Text and Rationale	Prior -ity	Allocated To
FSRD-1566	SRS-3.2.6.1 [PHASE II]	The Software **shall** implement Delay-Tolerant Networking (DTN) protocols. *Rationale: Delay-Tolerant Networking is a part of the experiment suite envisioned for CoNNeCT in support of Constellation and other NASA Missions.*	P3	PAS
FSRD-1706	SRS-3.2.6.2	The Software **shall** timestamp all data to within 1 ms accuracy. *Rationale: Data collected by the payload or any of the SDRs must be time-stamped in order to correlate data during post-processing.*	P2	PAS
FSRD-3013 GSRD-TBD	SRS-3.2.6.3	The Software **shall** provide information from on-board experiment applications. *Rationale: Experiment status is defined to include at least; State, Mode, Processor Utilization, Memory allocations, SDR setup, RF subsystem setup, and antenna pointing angle*	P2	PAS, GSW
FSRD-3202	SRS-3.2.6.4	The Software **shall** downlink experiment data via ISS Ethernet. *Rationale: Data generated during experiment operations on the payload or any of the SDRs must be available to the PIs for post-processing. The primary path is via ISS to the CoNNeCT Control Center via Space Network.*	P2	PAS
FSRD-2662 GSRD-TBD	SRS-3.2.6.5	The Software **shall** generate a pseudorandom bit sequence (PRBS) of 2^{23}-1 (for Ka-band) and 2^{11}-1 (for S-band) length for experimental links in real-time at experiment data rates. *Rationale: This data is used for Bit Error Rate calculations.*	P3	PAS, GSW

Parent Req	ReqID	Requirement Text and Rationale	Prior -ity	Allocated To
FSRD- 1574	SRS-3.2.6.6	The Software **shall** perform Bit Error Rate (BER) calculations on data received from the SDRs. *Rationale: It is expected that non-realtime BER calculations will be done in the avionics on stored data files.*	P3	PAS
GSRD-TBD	SRS-3.2.6.7	The Software **shall** perform Fast Fourier Transforms on raw analog-to-digital conversion (ADC) samples streamed from the SDRs. *Rationale: Fast Fourier Transform measurements are needed for experiment metrics and diagnostics. NOTE: Pushing this to the ground pending resolution by science [FSWDR].*	P3	GSW?
FSRD-2728 GSRD-TBD	SRS-3.2.6.8	The Software **shall** implement TCP per IETF STD-0007, "Transmission Control Protocol (TCP)." *Rationale: This requirement fulfills the goal of being compatible with Constellation's C3I specification Section 3.3.*	P2	PAS, GSW
FSRD-1567 GSRD-TBD	SRS-3.2.6.9	The Software **shall** implement IP per IETF STD-0005, "Internet Protocol (IP)." *Rationale: This requirement fulfills the goal of being compatible with Constellation's C3I specification Section 3.3.*	P2	PAS, GSW
FSRD-3019 GSRD-TBD	SRS-3.2.6.10	The Software **shall** upload a file of 12 MB or less transmitted over the primary path with no errors. *Rationale: The maximum file size is based on the Harris Waveform uploads. The ISS maximum is 8 MB, so breaking up the file into smaller chunks on the ground and reassembling in avionics is required. If errors are detected in an uploaded file, the file must be re-transmitted until it is determined to be error free.*	P1	PAS, GSW
FSRD-7074	SRS-3.2.6.11	The Software **shall** receive data at a user data rate from zero up to and including 25 Mbps. *Rationale: The maximum user data rate the Payload Avionics Software must receive is 25 Mbps. Lower rates must also be handled.*	P2	PAS

Parent Req	ReqID	Requirement Text and Rationale	Prior -ity	Allocated To
FSRD-3714	SRS-3.2.6.12	The Software **shall** send data at a user data rate from zero up to and including 100 Mbps. *Rationale: The maximum data rate the Payload Avionics Software must send is 100 Mbps. Lower rates must also be handled.*	P2	PAS
FSRD-3133	SRS-3.2.6.13	The software **shall** send and receive data on two SpaceWire channels simultaneously at up to the maximum SDR interface data rate (full duplex) that can be sustained by both SDRs. *Rationale: When communicating with multiple radios, the Software will need to sustain an achievable data rate. In this requirement, it is defined as the minimum data rate of the two (or three, if possible) SDRs involved in the experiment. For instance, this data could be provided in the routing table. If two other radios are involved, then the data rate may change, based on the capability of those two radios (i.e. a new minimum interface data rate). This value should not be hard coded, but should have the capability for change, once on-orbit.*	P2	PAS
FSRD-3135	SRS-3.2.6.14	The software **shall** send and receive data on two SpaceWire channels simultaneously at up to the maximum SDR interface data rate of each SDR, respectively (i.e. asymmetric data transfers to each SDR). *Rationale: The data manager function may serve as a data aggregator, such as a Lunar Relay function.*	P2	PAS
GSRD-TBD	SRS-3.2.6.15	The Software **shall** store all data originating from the Flight System and received from the ISS Huntsville Operations Support Center (HOSC), Space and or Near-Earth Network. *Rationale: Data shall be stored at the CCC.*	P1	GSW
GSRD-TBD	SRS-3.2.6.16	The Software **shall** make data available to PIs at remote locations. *Rationale: Data distribution to experimenters will be required and may include distribution through a web server.*	P3	GSW

3.2.7 Time Synchronization

Time synchronization among flight and ground elements to a common time source is critical to the correlation of data and calculating data link quality, as well as monitoring the payload and performing operations. The primary method of time synchronization is for the Payload Avionics to receive time via ISS, then provide the time to each onboard element. A secondary method is to receive time from TDRSS through the GD radio, which then passes the time to the avionics through the long code epoch via Low-Voltage Differential Signaling (LVDS). A third method is for the JPL radio to receive time via GPS and pass that to the Payload Avionics to synchronize other flight elements. Ground elements must synchronize to the same time source.

Parent Req.	Req. ID	Requirement Text and Rationale	Prior-ity	Allocated To
FSRD-2276 GSRD-TBD	SRS-3.2.7.1	The Software **shall** perform time synchronization among all Flight and Ground System elements to an Earth based reference with an accuracy of 30 milliseconds. *Rationale: The primary method of time synchronization is for the PAS to receive time via ISS, and then set the internal clocks of the SDRs. The secondary method is for one or more of the radios to receive a time signal and provide synchronization messages and timing to the Payload Avionics.*	P2	PAS, GSW
FSRD-3107	SRS-3.2.7.2	The Software **shall** perform time synchronization among all Flight elements to within 1 millisecond of each prior to execution of an experiment. *Rationale: Many experiment categories, including networking, navigation, and security, require tight time correlation among the elements involved. Synchronization will be performed over SpaceWire, which provides better than 1 ms resolution.*	P2	PAS

3.3 Software External Interface Requirements

The following paragraphs identify the external interfaces to the CoNNeCT Flight and Ground Software. Note that interfaces to the SDR software are considered internal interfaces to the CoNNeCT software system and will be described in Section 3.4. The SDR software is intentionally omitted in this section.

3.3.1 Interface Identification and Diagrams

The picture below depicts the software external interfaces for CoNNeCT. The flight software system interfaces externally to ISS through the ELC via both Ethernet and MIL-STD-1553 data bus (A. and B. in Figure 3.3.1-1). There is a MIL-STD-1553 interface to the Antenna Pointing System, over which the software must command the movement of the gimbals in order to track TDRS with the Ka-band and S-band antennas (C. in Figure 3.3.1-1). The ground software system has interfaces to the Enhanced Huntsville Operation Support Center (E. in Figure 3.3.1-1), the Space Network via White Sands, New Mexico (F. in Figure 3.3.1-1), and the Near-Earth Network (G. in Figure 3.3.1-1).

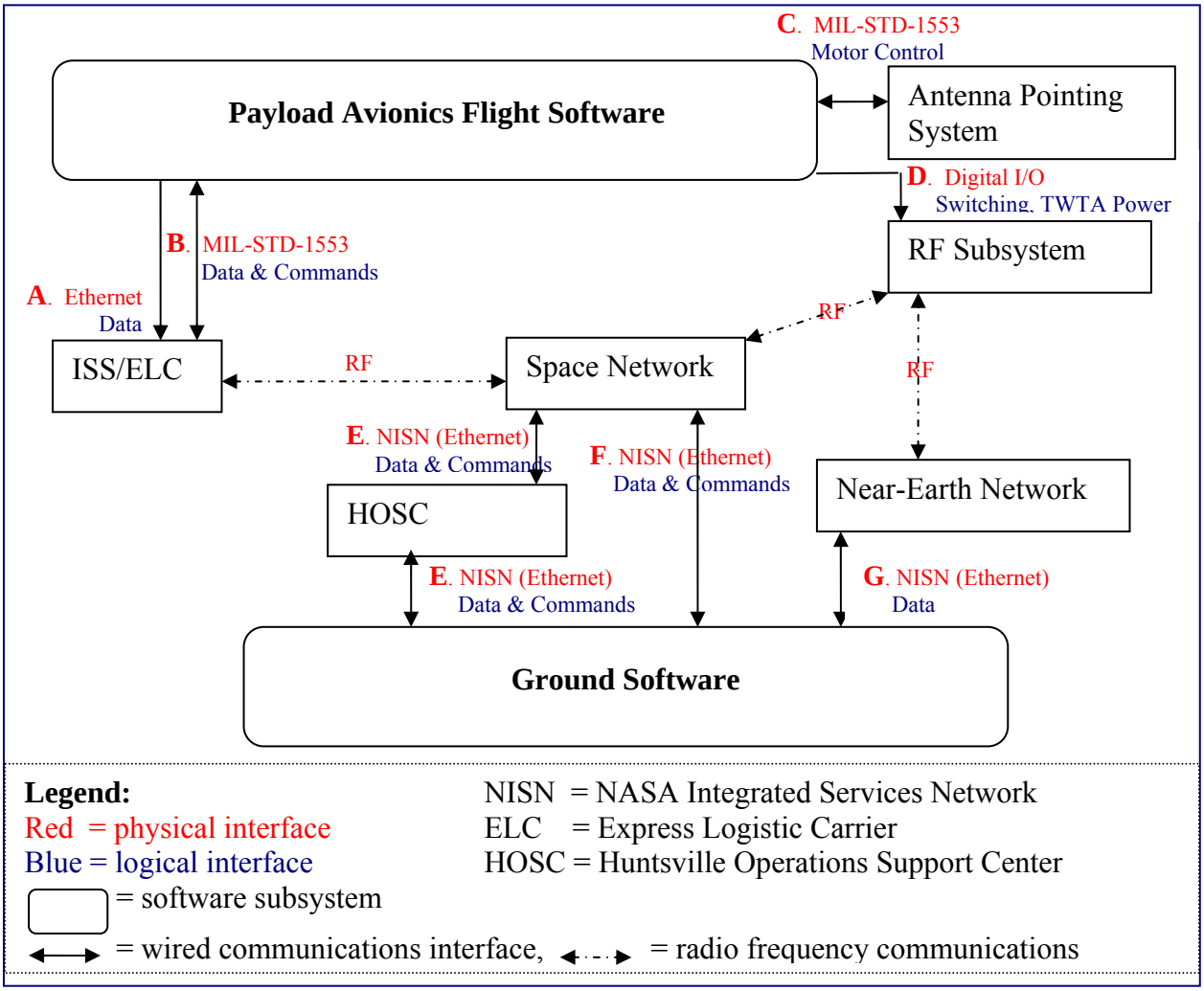

Figure 3.3.1-1—Software External Interfaces

3.3.2 EXPRESS Logistics Carrier (ELC) Interface

The CoNNeCT payload will be installed in the ELC located on the external truss of ISS. The ELC provides the interface with the ISS for data and commands. There are two physical data interfaces that implement communications – a bidirectional MIL-STD-1553 bus (B. in Figure 3.3.1-1) and a unidirectional (from payload to ELC) Ethernet bus (A. in Figure 3.3.1-1).

The primary path for commanding from the ground will be over the MIL-STD-1553 bus, which will also be the primary path for sending telemetry to the ground. This interface is also called the Low-Rate Data Link (LRDL). The LRDL interface with the station Payload Multiplexer/Demultiplexer (PL MDM) is for broadcast sync, commands, file uplink (read by payload), file downlink (write to PL MDM and downlink), Unique Ancillary Data, Broadcast Ancillary Data, Broadcast Time, cargo Health and Status data including Payload Executive Processor (PEP) service requests, PEP request responses, and Low Rate Telemetry data.

The Ethernet bus will be used for science data transfers to the ground. This interface is a unidirectional Medium-Rate Data Link (MRDL) from the payload to the ELC. From the ELC, data transfer is unidirectional to the ground via the High Rate Data Link (HRDL). The physical interfaces of the ELC will attach to the CoNNeCT payload through the Flight Releasable Attachment Mechanism (FRAM) and accessible only to the PAS CSCI.

In order to develop software and test the functionality of the payload side of this interface, the CoNNeCT project will obtain an ELC simulator for use in the software lab and for hardware integration and testing. The ELC is being developed at GSFC concurrently with the development of CoNNeCT. CoNNeCT must conform to the interface definition of the ELC, thus the ELC imposes the interface requirements on CoNNeCT. Software for the ELC simulator will be provided by GSFC.

Following are the software requirements for this interface.

Parent Req.	Req. ID	Requirement Text and Rationale	Prior-ity	Allocated To
FSRD-1548 FSRD-5655 thru -5676 FSRD-5681 thru -5684 FSRD-7038	SRS-3.3.2.1	The Software **shall** implement bidirectional communications over the MIL-STD-1553 interface with ELC using Consultative Committee on Space Data Systems (CCSDS) formatted packets as specified in SSP 57003-ELC and SSP 52050. *Rationale: Commands will be delivered to the payload and the payload will send telemetry to the ground over the 1553 interface. Communications with ISS requires use of CCSDS packet formats per SSP 57003-ELC and SSP 52050.*	P1	PAS

Parent Req.	Req. ID	Requirement Text and Rationale	Prior-ity	Allocated To
FSRD-7038	SRS-3.3.2.2	The Software **shall** communicate over the ELC Ethernet interface as specified in SSP 57003-ELC and SSP 52050 and CCSDS 701.0−B−2, Advanced Orbiting Systems, Network and Data Links: Architectural Specification, Blue Book, paragraph 1.6, at a maximum rate of 10 Mbps. *Rationale: High-rate data will be downlinked to the ground from the payload over the Ethernet interface.*	P1	PAS

3.3.3 RF Subsystem Interface

The RF Subsystem is a flight subsystem that will communicate directly with TDRSS and to the SN and NEN ground stations. This subsystem will contain antennas that will transmit and receive RF signals, a switching mechanism for controlling the paths between the radios and antennas, the cabling and connectors required to carry the signal, and other mechanical and electrical components for processing signals and mounting.

The control interface to the RF Subsystem is via the payload avionics. The software must set discrete outputs to control the switching mechanisms in the RF Subsystem (D. in Figure 3.3.1-1) to configure the flow of RF signals from the various radios to antennas throughout the system.

Following are the software requirements for this interface.

Parent Req.	Req. ID	Requirement Text and Rationale	Prior-ity	Allocated To
FSRD-6010	SRS-3.3.3.1	The Software **shall** control the RF Subsystem per the RF Subsystem ICD, GRC-CONN-ICD-0058 and the Payload Avionics Section Instrumentation List, GRC-CONN-LIST-0064. *Rationale: This refers to the operating the switches.*	P2	PAS

MISSING	SRS-3.3.3.2	The Software **shall** control the Traveling Wave Tube Amplifier (TWTA) per the TWTA Functional Specification, GRC-CONN-SPEC-0032, and the Payload Avionics Section Instrumentation List, GRC-CONN-LIST-0064. *Rationale: The TWTA is part of the RF subsystem. Power to the TWTA is one of the two inhibits for the Ka-band radiation hazard.*	P2	PAS

3.3.4 Space Network Interface

The Space Network will be used to transmit commands and data from/to the CoNNeCT Control Center to the payload via direct RF communications through TDRSS, i.e. without going through the Huntsville Operation Support Center (HOSC). Implementation will be an Ethernet connection between the CCC and the White Sands Facility over the NASA Integrated Services Network (NISN) (F. in Figure 3.3.1-1). This will be a mechanism for implementing S-band and Ka-band communications. Since the Space Network is well-established, it imposes requirements on the ground software.

Following are the software requirements for this interface.

Parent Req.	Req. ID	Requirement Text and Rationale	Prior-ity	Allocated To
GSRD-TBD	SRS-3.3.4.1	TBD		

3.3.5 Near-Earth Network Interface

The Near-Earth Network will be used to transmit commands and data from/to the CoNNeCT Control Center to the payload via direct-to-ground RF communications, i.e. without going through the Huntsville Operation Support Center (HOSC) or TDRSS. Implementation will be an Ethernet connection between the CCC and the NEN over the NISN (G. in Figure 3.3.1-1). This will be a mechanism for implementing S-band communications. Since the Near-Earth Network is well-established, it imposes requirements on the ground software.

Following are the software requirements for this interface.

Parent Req.	Req. ID	Requirement Text and Rationale	Prior-ity	Allocated To
GSRD-TBD	SRS-3.3.5.1	TBD		

3.3.6 Huntsville Operations Support Center (HOSC) Interface

The HOSC will be the primary operational interface for transmitting commands and data between the CoNNeCT Control Center and the payload. Implementation will be an Ethernet connection between the CCC and the HOSC (E. in Figure 3.3.1-1). The Space Network and Near-Earth Network interfaces are considered the "experimental interfaces", meaning they will be exercised as part of experiments, not as part of nominal operational communication. Since the HOSC is well-established, it imposes requirements on the ground software.

Following are the software requirements for this interface.

Parent Req.	Req. ID	Requirement Text and Rationale	Prior-ity	Allocated To
GSRD-TBD	SRS-3.3.6.1	TBD		

3.3.7 Antenna Pointing Subsystem Interface

The Antenna Pointing Subsystem contains an integrated gimbal assembly (IGA) for orienting the Ka-band antenna and the medium gain S-band antenna to point at a TDRS. The IGA contains two gimbals that control two independent directions of motion and the controller electronics. Software controls the gimbals by sending commands over the MIL-STD-1553 interface (C. in Figure 3.3.1-1) to the controller electronics and receives position information back.

Following are the software requirements for this interface.

Parent Req	Req ID	Requirement Text and Rationale	Prior-ity	Allocated To
MISSING	SRS-3.3.7.1	The software shall communicate with the gimbal controller electronics via the MIL-STD-1553 interface per the Gimbal Controller Electronics User Guide, DUDG10351000-14.	P1	PAS

3.4 Software Internal Interface Requirements

The following paragraphs identify the internal interfaces among the CoNNeCT Software CSCIs.

3.4.1 Internal Interface Identification and Diagrams

This section describes the internal interfaces between the software CSCIs of the system.

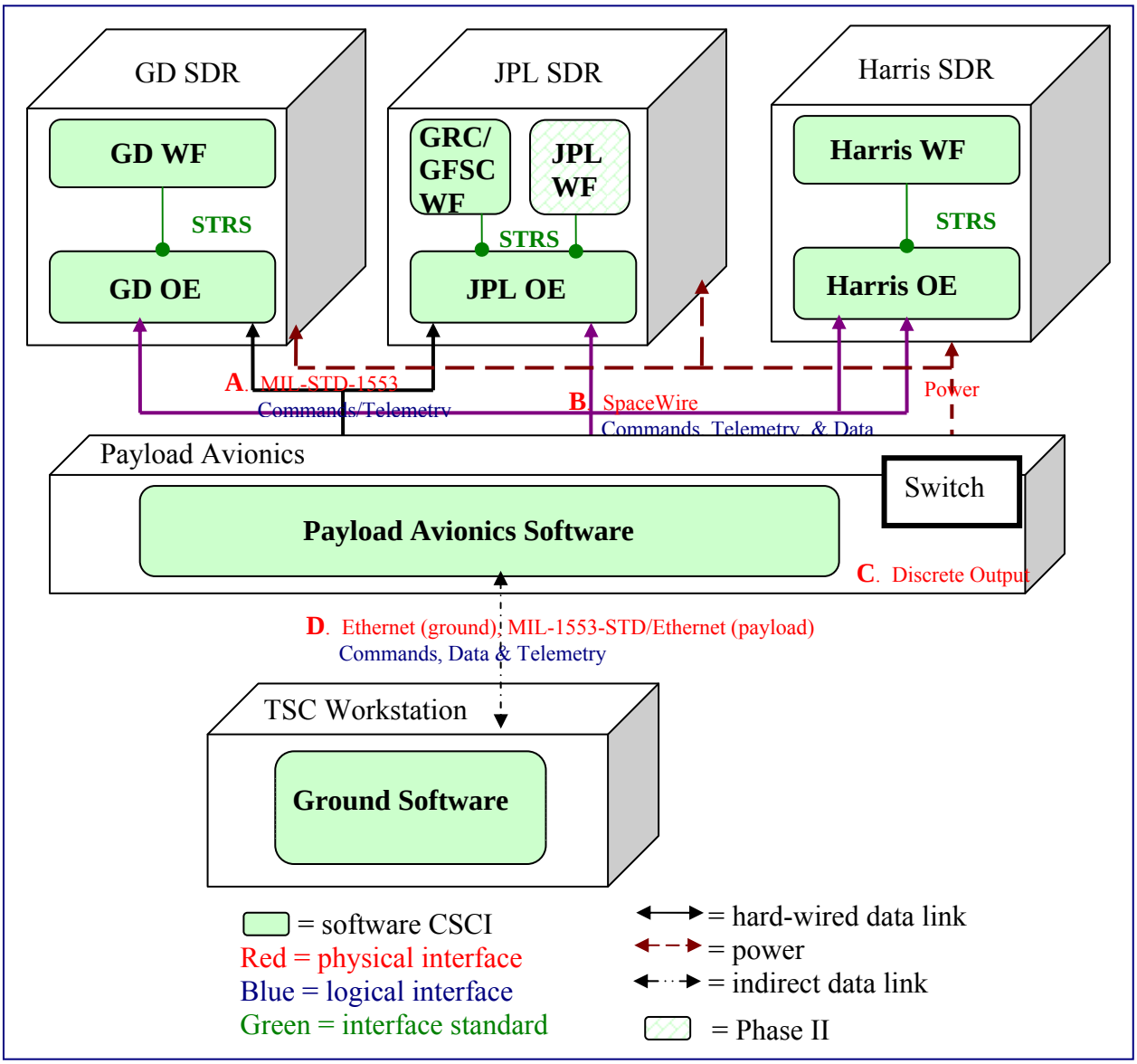

Figure 3.4.1-1—Software Internal Interfaces

3.4.2 Payload Controller / GD SDR Interface

The PAS and GD SDR interface over the MIL-STD-1553 (A. in Figure 3.4.1-1) for commands and telemetry and over SpaceWire (B. in Figure 3.4.1-1) for data transfer. There is a discrete output signal from an Input/Output (I/O) card to a power switch internal to the payload avionics (C. in Figure 3.4.1-1) which will be used by the PAS to power on the GD SDR.

Parent Req.	Req. ID	Requirement Text and Rationale	Prior-ity	Allocated To
FSRD-6012	SRS-3.4.2.1	The PAS **shall** format and send commands and files to the GD SDR via the MIL-STD-1553 data bus per GRC-CONN-ICD-0023 Vol. 1, CoNNeCT/GD SDR Interface Control Document. *Rationale: The command interface between the Payload Avionics and GD SDR is the MIL-STD-1553 data bus, which is also the path for transferring files. The command interface is described in ICD* 70-P57853P.	P1	PAS
FSRD-6012	SRS-3.4.2.2	The PAS **shall** format and send experiment data to the GD SDR via the SpaceWire data link per GRC-CONN-ICD-0023 Vol. 1, CoNNeCT/GD SDR Interface Control Document. *Rationale: The experiment data interface between the Payload Avionics and GD SDR is the SpaceWire data link. The data interface is described in ICD* 70-P57853P.	P2	PAS
FSRD-6012 FSRD-3017	SRS-3.4.2.3	The PAS **shall** receive experiment data from the GD SDR via the SpaceWire data link per GRC-CONN-ICD-0023 Vol. 1, CoNNeCT/GD SDR Interface Control Document. *Rationale: The experiment data interface between the Payload Avionics and GD SDR is the SpaceWire data link. The data interface is described in ICD* 70-P57853P.	P2	PAS

Parent Req.	Req. ID	Requirement Text and Rationale	Prior-ity	Allocated To
FSRD-6012	SRS-3.4.2.4	The PAS **shall** receive health and status data and files from the GD OE and Waveform via the MIL-STD-1553 data bus per CONN-ICD-0023 Vol. 1, CoNNeCT/GD SDR Interface Control Document. *Rationale: Low-rate health and status data is transferred over the MIL-STD-1553 data bus, as are files. The health and status is part of telemetry which is described in ICD* 70-P57853P.	P1	PAS

3.4.3 Payload Controller / JPL SDR Interface

The PAS and JPL SDR interface over the MIL-STD-1553 (A. in Figure 3.4.1-1) for commands and telemetry and over SpaceWire (B. in Figure 3.4.1-1) for data transfer. There is a discrete output signal from an I/O card to a power switch internal to the payload avionics (C. in Figure 3.4.1-1) which will be used by the PAS to power on the JPL SDR.

Parent Req.	Req. ID	Requirement Text and Rationale	Prior-ity	Allocated To
FSRD-6013	SRS-3.4.3.1	The PAS **shall** format and send commands and files to the JPL SDR via the MIL-STD-1553 data bus per GRC-CONN-ICD-0030 Vol. 1, CoNNeCT/JPL SDR Interface Control Document. *Rationale: The command interface between the Payload Avionics and JPL SDR is the MIL-STD-1553 data bus, which is also the path for transferring files. The command interface is described in GRC-CONN-ICD-0030 Vol. 3 (OE) and GRC-CONN-ICD-0030 Vol. 5 (Bootcode).*	P1	PAS
FSRD-6013	SRS-3.4.3.2	The PAS **shall** format and send experiment data to the JPL SDR via the SpaceWire data link per GRC-CONN-ICD-0030 Vol. 1, CoNNeCT/JPL SDR Interface Control Document. *Rationale: The experiment data interface between the Payload Avionics and JPL SDR is the SpaceWire data link.*	P2	PAS

Parent Req.	Req. ID	Requirement Text and Rationale	Prior-ity	Allocated To
FSRD-6013 FSRD-3017	SRS-3.4.3.3	The PAS **shall** receive experiment data from the JPL SDR via the SpaceWire data link at per GRC-CONN-ICD-0030 Vol. 1, CoNNeCT/JPL SDR Interface Control Document. *Rationale: The experiment data interface between the Payload Avionics and JPL SDR is the SpaceWire data link.*	P2	PAS
FSRD-6013	SRS-3.4.3.4	The PAS **shall** receive health and status data and files from the JPL OE and Waveforms via the MIL-STD-1553 data bus per GRC-CONN-ICD-0030 Vol. 1, CoNNeCT/JPL SDR Interface Control Document. *Rationale: Low-rate health and status data is transferred over the MIL-STD-1553 data bus, as are files. The health and status is part of telemetry which is described in GRC-CONN-ICD-0030 Vol. 3 (OE) and GRC-CONN-ICD-0030 Vol. 5 (Bootcode).*	P2	PAS

3.4.4 Payload Controller / Harris SDR Interface

The PAS and HAR SDR interface over SpaceWire (B. in Figure 3.4.1-1) for commands, telemetry, and data transfer. There are two SpaceWire links in the Payload Avionics, one for commands and telemetry and one for data transfer. There is a discrete output signal from an I/O card to a power switch internal to the payload avionics (C. in Figure 3.4.1-1) which will be used by the PAS to power on the Harris SDR.

Parent Req.	Req. ID	Requirement Text and Rationale	Prior-ity	Allocated To
FSRD-6011	SRS-3.4.4.1	The PAS **shall** format and send commands and files to the HAR SDR via the SpaceWire command link per GRC-CONN-ICD-0090, CoNNeCT/HC SDR Interface Control Document. *Rationale: The command interface between the Payload Avionics and HAR SDR is the SpaceWire command link, which is also the path for transferring files. The command interface is described in GRC-CONN-ICD-0090 Vol. 2. Note that the Harris radio has two SpaceWire interfaces, one for commands, and one for data.*	P1	PAS
FSRD-6011	SRS-3.4.4.2	The PAS **shall** format and send experiment data to the HAR SDR via the SpaceWire data link per GRC-CONN-ICD-0090, CoNNeCT/HC SDR Interface Control Document. *Rationale: The experiment data interface between the Payload Avionics and HAR SDR is the SpaceWire data link.*	P2	PAS
FSRD-6011 FSRD-3017	SRS-3.4.4.3	The PAS **shall** receive experiment data from the HAR SDR via the SpaceWire data link per GRC-CONN-ICD-0090, CoNNeCT/HC SDR Interface Control Document. *Rationale: The experiment data interface between the Payload Avionics and HAR SDR is the SpaceWire data link.*	P2	PAS

Parent Req.	Req. ID	Requirement Text and Rationale	Prior-ity	Allocated To
FSRD-6011	SRS-3.4.4.4	The PAS **shall** receive health and status data and files from the HAR OE and Waveforms via the SpaceWire command link per GRC-CONN-ICD-0090, CoNNeCT/HC SDR Interface Control Document. *Rationale: The Harris SDR has two SpaceWire interfaces and no MIL-STD-1553 interfaces. Health and status data for the Harris SDR will be transferred over the SpaceWire command link, as are files. The health and status is part of telemetry which is described in GRC-CONN-ICD-0090 Vol. 2.*	P1	PAS

3.4.5 Payload Controller / Ground Software Interface

The interface between the PAS and Ground Software (D. in Figure 3.4.1-1) is not a direct or hard-wired interface. This interface can take many forms, e.g. through the Space Network or Near-Earth Network or through the HOSC. These external interfaces were described in Section 3.3. This section is intended to describe the requirements on the PAS and the Ground Software so that data and commands can be transmitted and received.

Parent Req.	Req. ID	Requirement Text and Rationale	Prior-ity	Allocated To
GSRD-TBD	SRS-3.4.5.1	TBD		

3.5 Software Internal Data Requirements

In addition to the health and status data detailed in Section 3.2.2 and the experiment data detailed in Section 3.2.6, the following internal data requirements apply.

Parent Req.	Req. ID	Requirement Text and Rationale	Prior-ity	Allocated To
FSRD-2278 GSRD-TBD	SRS-3.5.1	The Software **shall** provide the software load and instantiation time log of each SDR (maintained by the payload) upon request. *Rationale: This data will be required for post-operations analysis and must be available on request from Ground.*	P2	PAS, GSW

3.6 Adaptation Requirements

CoNNeCT will be installed in the P3 position on the ISS truss. This position will influence the algorithms for pointing the Ka-band antenna at TDRSS and for tracking TDRSS. These algorithms will be developed as a result of the Orbital Analysis efforts being carried out under WBS 5.0. Requirement SRS-3.2.4.1 addresses pointing and tracking of TDRSS.

3.7 Safety Requirements

Software has been identified as a hazard control for inadvertent Ka-band radiation. The following requirements capture the safety-critical software requirements.

Parent Req.	Req. ID	Requirement Text and Rationale	Prior-ity	Allocated To
FSRD-0422 GSRD-TBD	SRS-3.7.1	The Software development and procurement **shall** comply with requirements of NASA-STD-8719.13 Rev B, Software Safety Standard. *Rationale: 8719.13 Rev B identifies the activities necessary to ensure that safety is designed into the CoNNeCT software. The standard specifies the software safety activities, data, and documentation necessary for the acquisition or development of software in a safety-critical system.*	P1	PAS, GSW

Parent Req.	Req. ID	Requirement Text and Rationale	Prior-ity	Allocated To
FSRD-1721	SRS-3.7.2-Safety	The Software **shall** implement single fault tolerance to inadvertent activation of RF sources in compliance with SSP-50038, "Computer-Based Control System Safety Requirements", and MA2-97-083. *Rationale: The software will implement two independent hazard controls in the power to the TWTA and the power to the Harris SDR, making the software safety critical. SSP 50038 and MA2-97-083 levy requirements on safety critical software systems.*	P1	PAS

3.8 Security and Privacy Requirements

Part of the experiment suite on CoNNeCT will be to test and develop security implementations in networking and the software must support this. These requirements are listed in Section 3.1, Section 3.2, and Section 3.3 of this document. The requirement dictates that a security key be stored in non-volatile memory for participating SDRs.

Much of the CoNNeCT technology is Sensitive But Unclassified. Much of the SDR technology is proprietary to the vendors who are developing the radios. For this reason, all information (documentation, code, test results) will be controlled within the project. Not all members of the project may have access to all project information.

3.9 Environment Requirements

This paragraph contains requirements regarding the environment in which the software must operate.

Parent Req.	Req. ID	Requirement Text and Rationale	Prior-ity	Allocated To
FSRD-1084 GSRD-TBD	SRS-3.9.1	The Software **shall** implement any date sensitive code or timers in a manner that allows operations for a period of at least two years after launch. *Rationale: The payload minimum design life is 2 years and the software must be able to operate for that entire time.*	P2	PAS, GSW

3.10 Computer Resource Requirements

The following paragraphs describe the computer resource requirements of the system.

3.10.1 Computer Hardware Performance and Timing Requirements

Information regarding computer hardware that must be used including, as applicable, number of each type of equipment, type, size, capacity, and other required characteristics of processors, memory, input/output devices, auxiliary storage, communications/network equipment, and other required equipment will be specified in the lower-level specifications.

3.10.2 Computer Hardware Resource Utilization Requirements

This paragraph specifies the requirements on the computer hardware resource utilization.

Parent Req.	Req. ID	Requirement Text and Rationale	Prior-ity	Allocated To
FSRD-1574	SRS-3.10.2.1	The Software **shall** utilize less than **[TBD-06] %** of processing capabilities, leaving the remainder for experimenter use. *Rationale: The TBD must be resolved, but the intent is to provide a certain percentage of the processing capability for experiments.*	P2	PAS
FSRD-1570	SRS-3.10.2.2	The Software **shall** manage non-volatile storage so as to provide a minimum of 40 GB plus two times the sum of the memory capacity for all SDRS for experiment use. *Rationale: The 40 GB of storage is intended to store experiment data, waveforms, experiment data files, and other experiment resources. SDRs may transfer their memory contents to storage.*	P2	PAS
FSRD-1572	SRS-3.10.2.3	The Software **shall** manage volatile storage so as to provide up to 50 MB for experiment use. *Rationale: DTN implementation drives this number –analysis based on "Interplanetary Overlay Network (ION)" minimum available memory used.*	P3	PAS

Parent Req.	Req. ID	Requirement Text and Rationale	Prior-ity	Allocated To
FSRD-1084	SRS-3.10.2.4	The Software **shall** manage limited-life flash memory so as to not wear out its usage within the first two years after launch. *Rationale: The payload minimum design life is 2 years and the software must be able to operate for that entire time.*	P1	PAS

3.10.3 Computer Software Requirements

Requirements regarding computer software that must be used by, or incorporated into, the delivered software, such as operating systems, database management systems, communications/network software, utility software, input and equipment simulators, test software, and manufacturing software will be provided in the lower-level specifications. The correct nomenclature, version, and documentation references of each such software item shall be provided.

3.10.4 Computer Communications Requirements

The computer communications requirements are specified in Section 3.2, Section 3.3, and Section 3.4 of this document.

3.11 Software Quality Factors

This paragraph specifies requirements concerned with software quality factors such as, reliability (the ability to perform with correct, consistent results), maintainability (the ability to be easily corrected), availability (the ability to be accessed and operated when needed), flexibility (the ability to be easily adapted to changing requirements), portability (the ability to be easily modified for a new environment), reusability (the ability to be used in multiple applications), testability (the ability to be easily and thoroughly tested), usability (the ability to be easily learned and used), and other attributes.

Parent Req.	Req. ID	Requirement Text and Rationale	Prior-ity	Allocated To
FSRD-5506 GSRD-TBD	SRS-3.11.1	The Software **shall** be developed according to NPR 7150.2 Software Engineering Requirements for Class C software. *Rationale: All software for the CoNNeCT project is classified as Class C software. Some of the CSCIs are delivered code and will fall under the requirements for Software Acquisition or Software Reuse in NPR 7150.2. Cooperative Agreements and existing contracts may prohibit enforcement of this requirement on radio and Waveform software.*	P1	PAS, GSW

3.12 Design and Implementation Constraints

The flight software will be developed for the VxWorks operating system in C/C++. This is dictated by the choice of the S950 from AiTech as the main processor.

The ground software will be based on the Fluid Combustion Facility (FCF) ground software and will be built to be run on the TReK workstations in the CCC. Much of the infrastructure built for FCF will be reused for CoNNeCT whenever possible.

3.13 Personnel-Related Requirements

Requirements regarding the number, skill levels, duty cycles, training needs, or other information about the personnel who will use or support the software will be described in the Ground Software Specification. The GSW is the only software subsystem that will be utilized directly by humans. The flight system is controlled through the GSW from the CCC.

3.14 Training-Related Requirements

Requirements pertaining to training will be included in the lower-level specifications.

3.15 Logistics-Related Requirements

Requirements for installing software and Waveforms will be provided by the radio partners. Installation procedures for installing software on the avionics box will be developed by the GRC flight software team.

3.16 Packaging Requirements

Software delivered to GRC by radio partners will be on compact disk. The contents of these disks will be entered into the GRC software repository.

3.17 Precedence and Criticality of Requirements

Requirements have been prioritized in the following manner:

- **P1** = must have at launch; supports incompressible test list
- **P2** = should have a launch; supports mission success criteria
- **P3** = can defer; including all Phase II requirements, but not the underlying capability to support implementation of these requirements.

This designation is found in the fourth column of the requirements tables.

4.0 REQUIREMENTS TRACEABILITY AND VERIFICATION METHODS

Table 4-1 below identifies the traceability and verification methods for each requirement identified in Section 3. It contains:

a. Traceability from each requirement in this specification to the system requirement it addresses. (Table 4-1)

b. Traceability from each system requirement allocated to software to the software requirements in this specification that address it. All system requirements allocated to software shall be accounted for. (Table 4-2)

The table also defines a set of verification methods and shall specify for each requirement in Section 3 the method(s) to be used to ensure that the requirement has been met. Verification methods may include:

a. **Inspection**: The visual examination of code, documentation, etc.

b. **Analysis**: The processing of accumulated data obtained from other verification methods. Examples are reduction, interpretation, or extrapolation of test results.

c. **Test**: The operation of the software, or a part of the software, using instrumentation or other special test equipment to collect data for later analysis.

d. **Demonstration**: The operation of the software, or a part of the software, that relies on observable functional operation not requiring the use of instrumentation, special test equipment, or subsequent analysis.

The following identifiers will be used to refer to the parent documents in the "Parent Requirement" column for requirements:

- **FSRD** CoNNeCT Flight System Requirements Document, GRC-CONN-SRD-0035
- **GSRD** CoNNeCT Ground Segment System Requirements Document, GRC-CONN-SRD-0036

CoNNeCT Requirements Traceability and Verification Matrix

Table 4-1—CoNNeCT Requirements Traceability and Verification Matrix

Requirement Number			Requirement	Verification Type				Remarks
	Parent	**CSCI**		**I**	**A**	**T**	**D**	
3.1 Flight System States and Modes								
	FSRD-5534	SRS-3.1.1	The Software **shall** initialize the system to a known configuration.	X				Test will be done at level 5.
	FSRD- 3684 FSRD-6962 thru FSRD-6994 GSRD-TBD	SRS-3.1.2	The Software **shall** operate SDRs in the combinations and configurations specified in FSRD Table 3.2.2.1-1, "CoNNeCT Operational Configurations".		X		X	May not test all configurations prior to launch.
	FSRD-7069	SRS-3.1.3	The Software **shall** implement modes and states per the CoNNeCT System Modes and States document, GRC-CONN-DOC-0152. *Rationale: System modes and states are used to define system operations and coordination between flight and ground.*			X		
3.2.1 Command and Control								
	FSRD-1708 GSRD-TBD	SRS-3.2.1.1	The Software **shall** implement commanding over the primary path per the Command and Telemetry Databook, GRC-CONN-DBK-0128.			X		Test with ELC simulator
	FSRD-1704	SRS-3.2.1.2	The Software **shall** implement commanding over the experimental path per the Command and Telemetry Databook, GRC-CONN-DBK-0128.			X		May not be tested prior to flight.

Requirement Number			Requirement	Verification Type				Remarks
	Parent	**CSCI**		**I**	**A**	**T**	**D**	
	FSRD-6008	SRS-3.2.1.3	The Software **shall** control subsystem power via discrete signals per the Payload Avionics Section Instrumentation List, GRC-CONN-LIST-0064.			X		
	FSRD-1569 GSRD-TBD	SRS-3.2.1.4	The Software **shall** control movement of the Ka-band and medium gain S-band Antennas over the MIL-STD-1553 data interface with the gimbal motor controller per the gimbal controller electronics user guide, DUDG10351000-14.		X	X		May not be able to test in actual flight hardware configuration prior to launch.
	FSRD-5464	SRS-3.2.1.5	The Software **shall** control subsystem temperature when the Payload Avionics is powered.			X		
	GSRD-TBD	SRS-3.2.1.6	The Software **shall** provide a command interface to operations personnel to generate and send commands from the CoNNeCT Control Center.			X		
	FSRD-3109, FSRD-3111 FSRD-6670 GSRD-TBD	SRS-3.2.1.7	The Software **shall** reprogram the following reprogrammable devices during flight: payload avionics S950 processor, SDR processors and reprogrammable fixed programmable gate arrays (FPGAs) for all SDRs.			X		
3.2.2 Health & Status and Telemetry								
	FSRD-1217 FSRD-1218 FSRD-3193 FSRD-3194 FSRD-3195	SRS-3.2.2.1	The Software **shall** collect engineering data at a minimum rate of once per second as defined in the CoNNeCT Command and Telemetry Data Book GRC-CONN-DBK-0128.			X		

Requirement Number			Requirement	Verification Type				Remarks
	Parent	**CSCI**		**I**	**A**	**T**	**D**	
	FSRD-3193 FSRD-3194 FSRD-3195 FSRD-3202 FSRD-3213 FSRD-3214 FSRD-3215 GSRD-TBD	SRS-3.2.2.2	The Software **shall** downlink engineering data containing the health and status monitoring of the Flight System for downlink via ISS.			X		
	FSRD-3200	SRS-3.2.2.3	The Software **shall** provide telemetry data parameters to the Ground System at least once per minute during an experiment period.			X		
	FSRD-3021 GSRD-TBD	SRS-3.2.2.4	The Software **shall** downlink engineering data containing the health and status monitoring of the Flight System for downlink via the experimental path.			X		
3.2.3 Fault Management								
	FSRD-1222 FSRD-5530 FSRD-6596 GSRD-TBD	SRS-3.2.3.1	The Software **shall** monitor engineering data and take specified action per CoNNeCT System Command and Telemetry Data Book, GRC-CONN-DBK-0128 and the Fault Detection, Isolation, and Recovery (FDIR) Report.			X		
	FSRD-3198 GSRD-TBD	SRS-3.2.3.2	The Software **shall** provide the error log from each SDR to the ground upon request.			X		
3.2.4 RF Communications								

Requirement Number			Requirement	Verification Type				Remarks
	Parent	**CSCI**		**I**	**A**	**T**	**D**	
	FSRD-1569 GSRD-TBD	SRS-3.2.4.1	The Software **shall** track any assigned TDRS during Ka-band and medium rate S-band operations and whenever antennas on the gimbals are being used. *Rationale: The PAS will control the gimbal to track TDRS. The GSW may send the commands with current TDRS location. The software needs to allow for tracking any existing or future TDRS, so should not hardcode to any particular satellite designation.*		X		X	
3.2.5 GPS Operations								
	FSRD-3675	SRS-3.2.5.1	The Software **shall** collect, store, and downlink data from five GPS SDR experiment sessions per day, each lasting a minimum of 30 minutes.		X			
	FSRD-3677 FSRD-6672	SRS-3.2.5.2	The Software **shall** collect, store, and downlink data from two GPS SDR experiment sessions every 60 days, each lasting a minimum of 48 hours.		X			
3.2.6 Experiments and Data								
	FSRD-1566	SRS-3.2.6.1 [PHASE II]	The Software **shall** implement DTN protocols.		X		X	DTN will not be verified prior to flight but will be demonstrated by PIs on EM hardware prior to flight.
	FSRD-1706	SRS-3.2.6.2	The Software **shall** timestamp all data to within 1 ms accuracy.			X		
	FSRD-3013 GSRD-TBD	SRS-3.2.6.3	The Software **shall** provide information from on-board experiment applications.			X		

Requirement Number			Requirement	Verification Type				Remarks
	Parent	**CSCI**		**I**	**A**	**T**	**D**	
	FSRD3202	SRS-3.2.6.4	The Software **shall** downlink experiment data via ISS Ethernet.			X		
	FSRD-2662	SRS-3.2.6.5	The Software **shall** generate a pseudorandom bit sequence (PRBS) of 2^{23}-1 (for Ka-band) and 2^{11}-1 (for S-band) length for experimental links in real-time at experiment data rates.			X		
	FSRD- 1574	SRS-3.2.6.6	The Software **shall** perform Bit Error Rate calculations on data received from the SDRs.			X		
	GSRD-TBD	SRS-3.2.6.7	The Software **shall** perform Fast Fourier Transforms on raw ADC samples streamed from the SDRs.			X		
	FSRD-2728 GSRD-TBD	SRS-3.2.6.8	The Software **shall** implement TCP per IETF STD-0007, "Transmission Control Protocol (TCP)."			X		
	FSRD-1567 GSRD-TBD	SRS-3.2.6.9	The Software **shall** implement IP per IETF STD-0005, "Internet Protocol (IP)."			X		
	FSRD-3019 GSRD-TBD	SRS-3.2.6.10	The Software **shall** upload a file of 12 MB or less transmitted over the primary path with no errors.			X		
	FSRD-7074	SRS-3.2.6.11	The Software **shall** receive data at a user data rate from zero up to and including 12.5 Mbps.			X		
	FSRD-3714	SRS-3.2.6.12	The Software **shall** send data at a user data rate from zero up to and including 100 Mbps.			X		

Requirement Number			Requirement	Verification Type				Remarks
	Parent	**CSCI**		**I**	**A**	**T**	**D**	
	FSRD-3133	SRS-3.2.6.13	The software **shall** send and receive data on two SpaceWire channels simultaneously at up to the maximum SDR interface data rate (full duplex) that can be sustained by both SDRs.			X		
	FSRD-3135	SRS-3.2.6.1 4	The software **shall** send and receive data on two SpaceWire channels simultaneously at up to the maximum SDR interface data rate of each SDR, respectively (i.e. asymmetric data transfers to each SDR).			X		
	GSRD-TBD	SRS-3.2.6.15	The Software **shall** store all data originating from the Flight System and received from the ISS HOSC, Space, and or Near-Earth Network.			X		
	GSRD-TBD	SRS-3.2.6.16	The Software **shall** send data to PIs at remote locations. *Rationale: Data distribution to experimenters will be required.*			X		
3.2.7 Time Synchronization								
	FSRD-2276 GSRD-TBD	SRS-3.2.7.1	The Software **shall** perform time synchronization among all Flight and Ground System elements to an Earth based reference with an accuracy of 30 milliseconds.		X			
	FSRD-3107	SRS-3.2.7.2	The Software **shall** perform time synchronization among all Flight elements to within 1 millisecond of each prior to execution of an experiment.			X		
3.3.2 EXPRESS Logistics Carrier (ELC) Interface								

Requirement Number			Requirement	Verification Type				Remarks
	Parent	**CSCI**		**I**	**A**	**T**	**D**	
	FSRD-1548 FSRD-5655 thru -5676 FSRD-5681 thru -5684 FSRD-7038	SRS-3.3.2.1	The Software **shall** implement bidirectional communications over the MIL-STD-1553 interface with ELC using CCSDS formatted packets as specified in SSP 57003-ELC and SSP 52050.			X		Test with ELC simulator
	FSRD-7038	SRS-3.3.2.2	The Software **shall** communicate over the ELC Ethernet interface as specified in SSP 57003-ELC and SSP 52050 and CCSDS 701.0−B−2, Advanced Orbiting Systems, Network and Data Links: Architectural Specification, Blue Book, paragraph 1.6, at a maximum rate of 10 Mbps.			X		Test with ELC simulator
3.3.3 RF Subsystem Interface								
	FSRD-6010	SRS-3.3.3.1	The Software **shall** control the RF Subsystem per the RF Subsystem ICD, GRC-CONN-ICD-0058 and the Payload Avionics Section Instrumentation List, GRC-CONN-LIST-0064.			X		
	MISSING	SRS-3.3.3.2	The Software **shall** control the Traveling Wave Tube Amplifier (TWTA) per the TWTA Functional Specification, GRC-CONN-SPEC-0032, and the Payload Avionics Section Instrumentation List, GRC-CONN-LIST-0064.			X		
3.3.4 Space Network Interface								
		SRS-3.3.4.1						
3.3.5 Near-Earth Network Interface								

Requirement Number			Requirement	Verification Type				Remarks
	Parent	**CSCI**		**I**	**A**	**T**	**D**	
		SRS-3.3.5.1						
3.3.6 HOSC Interface								
		SRS-3.3.6.1						
3.3.7 Antenna Pointing Subsystem								
	MISSING	SRS-3.3.7.1	The software shall communicate with the gimbal controller electronics via the MIL-STD-1553 interface per the Gimbal Controller Electronics User Guide, DUDG10351000-14.			X		
3.4.2 Payload Controller / GD SDR Interface								
	FSRD-6012	SRS-3.4.2.1	The PAS **shall** format and send commands to the GD SDR via the MIL-STD-1553 data bus per GRC-CONN-ICD-0023 Vol. 1, CoNNeCT/GD SDR Interface Control Document.			X		
	FSRD-6012	SRS-3.4.2.2	The PAS **shall** format and send experiment data to the GD SDR via the SpaceWire data link per GRC-CONN-ICD-0023 Vol. 1, CoNNeCT/GD SDR Interface Control Document.			X		
	FSRD-6012 FSRD-3017	SRS-3.4.2.3	The PAS **shall** receive experiment data from the GD SDR via the SpaceWire data link per GRC-CONN-ICD-0023 Vol. 1, CoNNeCT/GD SDR Interface Control Document.			X		

Requirement Number			Requirement	Verification Type				Remarks
	Parent	**CSCI**		**I**	**A**	**T**	**D**	
	FSRD-6012	SRS-3.4.2.4	The PAS **shall** receive health and status data from the GD OE and Waveform via the MIL-STD-1553 data bus per CONN-ICD-0023 Vol. 1, CoNNeCT/GD SDR Interface Control Document.			X		
3.4.3 Payload Controller / JPL SDR Interface								
	FSRD-6013	SRS-3.4.3.1	The PAS **shall** format and send commands to the JPL SDR via the MIL-STD-1553 data bus per GRC-CONN-ICD-0030 Vol. 1, CoNNeCT/JPL SDR Interface Control Document.			X		
	FSRD-6013	SRS-3.4.3.2	The PAS **shall** format and send experiment data to the JPL SDR via the SpaceWire data link per GRC-CONN-ICD-0030 Vol. 1, CoNNeCT/JPL SDR Interface Control Document.			X		
	FSRD-6013 FSRD-3017	SRS-3.4.3.3	The PAS **shall** receive experiment data from the JPL SDR via the SpaceWire data link at per GRC-CONN-ICD-0030 Vol. 1, CoNNeCT/JPL SDR Interface Control Document.			X		
	FSRD-6013	SRS-3.4.3.4	The PAS **shall** receive health and status data from the JPL OE and Waveforms via the MIL-STD-1553 data bus per GRC-CONN-ICD-0030 Vol. 1, CoNNeCT/JPL SDR Interface Control Document.			X		
3.4.4 Payload Controller / Harris SDR Interface								

Requirement Number			Requirement	Verification Type				Remarks
	Parent	**CSCI**		**I**	**A**	**T**	**D**	
	FSRD-6011	SRS-3.4.4.1	The PAS **shall** format and send commands to the HAR SDR via the SpaceWire command link per GRC-CONN-ICD-0090, CoNNeCT/HC SDR Interface Control Document.			X		
	FSRD-6011	SRS-3.4.4.2	The PAS **shall** format and send experiment data to the HAR SDR via the SpaceWire data link per GRC-CONN-ICD-0090, CoNNeCT/HC SDR Interface Control Document.			X		
	FSRD-6011 FSRD-3017	SRS-3.4.4.3	The PAS **shall** receive experiment data from the HAR SDR via the SpaceWire data link per GRC-CONN-ICD-0090, CoNNeCT/HC SDR Interface Control Document.			X		
	FSRD-6011	SRS-3.4.4.4	The PAS **shall** receive health and status data from the HAR OE and Waveforms via the SpaceWire command link per GRC-CONN-ICD-0090, CoNNeCT/HC SDR Interface Control Document.			X		
3.4.5 Payload Controller / Ground Software Interface								
		SRS-3.4.5.1						
3.5 Software Internal Data Requirements								
	FSRD-2278 GSRD-TBD	SRS-3.5.1	The Software **shall** provide the software load and instantiation time log of each SDR (maintained by the payload) upon request.			X		
3.7 Safety Requirements								

Requirement Number			Requirement	Verification Type				Remarks
	Parent	**CSCI**		**I**	**A**	**T**	**D**	
	FSRD-0422 GSRD-TBD	SRS-3.7.1	The Software development and procurement **shall** comply with requirements of NASA-STD-8719.13 Rev B, Software Safety Standard.	X				
	FSRD-1721	SRS-3.7.2-Safety	The Software **shall** implement single fault tolerance to inadvertent activation of RF sources in compliance with SSP-50038, "Computer-Based Control System Safety Requirements, and MA2-97-083.			X		
3.9 Environment Requirements								
	FSRD-1084 GSRD-TBD	SRS-3.9.1	The Software **shall** implement any date sensitive code or timers in a manner that allows operations for a period of at least two years after a July 2011 launch.		X			
3.10.2 Computer Hardware Resource Utilization Requirements								
	FSRD-1574	SRS-3.10.2.1	The Software **shall** utilize less than [TBD-06] **%** of processing capabilities, leaving the remainder for experimenter use.		X			
	FSRD-1570	SRS-3.10.2.2	The Software **shall** manage non-volatile storage so as to provide a minimum of 40 GB plus two times the sum of the memory capacity for all SDRS for experiment use.		X			
	FSRD-1572	SRS-3.10.2.3	The Software **shall** manage volatile storage so as to provide up to 50 MB for experiment use.		X			

Requirement Number			Requirement	Verification Type				Remarks
	Parent	**CSCI**		**I**	**A**	**T**	**D**	
	FSRD-1084	SRS-3.10.2.4	The Software **shall** manage limited-life flash memory so as to not wear out its usage within the first two years after launch.		X			
3.11 Software Quality Factors								
	FSRD-5506 GSRD-TBD	SRS-3.11.1	The Software **shall** be developed according to NPR 7150.2 Software Engineering Requirements for Class C software.	X				

Table 4-2 below is taken from the FSRD Allocation Matrix and is the subset of requirements allocated to the Avionics Subsystem. Analysis was done to identify which requirements apply to software and a bidirectional trace was completed between the FSRD and the SRS.

Table 4-2—CoNNeCT Flight Systems Requirements Traceability to Software

Requirement Allocation Cross Reference Matrix	
Requirement ID	**Trace to SRS**
FSRD-0422	SRS-3.7.1
FSRD-1084	SRS-3.9.1, SRS-3.10.2.4
FSRD-1217	SRS-3.2.2.1
FSRD-1218	SRS-3.2.2.1
FSRD-1222	SRS-3.2.3.1
FSRD-1548	SRS-3.3.2.1
FSRD-1566	SRS-3.2.6.1
FSRD-1567	SRS-3.2.6.9
FSRD-1569	SRS-3.2.1.4, SRS-3.2.4.1
FSRD-1570	SRS-3.10.2.2
FSRD-1572	SRS-3.10.2.3
FSRD-1574	SRS-3.2.6.6, SRS-3.10.2.1
FSRD-1704	SRS-3.2.1.2
FSRD-1706	SRS-3.2.6.2
FSRD-1708	SRS-3.2.1.1
FSRD-1721	SRS-3.7.2-Safety
FSRD-2276	SRS-3.2.7.1

Requirement Allocation Cross Reference Matrix	
Requirement ID	**Trace to SRS**
FSRD-2278	SRS-3.5.1
FSRD-2662	SRS-3.2.6.5
FSRD-2728	SRS-3.2.6.8
FSRD-3013	SRS-3.2.6.3
FSRD-3017	SRS-3.4.2.3, SRS-3.4.3.3, SRS-3.4.4.3
FSRD-3019	SRS-3.2.6.10
FSRD-3021	SRS-3.2.2.4 Data downlink via experimental path- an
FSRD-3107	SRS-3.2.7.2
FSRD-3109	SRS-3.2.1.7
FSRD-3111	SRS-3.2.1.7
FSRD-3133	SRS-3.2.6.13
FSRD-3135	SRS-3.2.6.14
FSRD-3193	SRS-3.2.2.1, SRS-3.2.2.2
FSRD-3194	SRS-3.2.2.1, SRS-3.2.2.2
FSRD-3195	SRS-3.2.2.1, SRS-3.2.2.2
FSRD-3198	SRS-3.2.3.2
FSRD-3200	SRS-3.2.2.3
FSRD-3202	SRS-3.2.2.2, SRS-3.2.6.4
FSRD-3213	SRS-3.2.2.1, SRS-3.2.2.2
FSRD-3214	SRS-3.2.2.1, SRS-3.2.2.2
FSRD-3215	SRS-3.2.2.1, SRS-3.2.2.2
FSRD-3675	SRS-3.2.5.1
FSRD-3677	SRS-3.2.5.2
FSRD-3684	SRS-3.1.2
FSRD-3714	SRS-3.2.6.12
FSRD-5464	SRS-3.2.1.5
FSRD-5506	SRS-3.11.1
FSRD-5530	SRS-3.2.3.1
FSRD-5534	SRS-3.1.1
FSRD-5655	SRS-3.3.2.1
FSRD-5656	SRS-3.3.2.1
FSRD-5657	SRS-3.3.2.1
FSRD-5658	SRS-3.3.2.1
FSRD-5659	SRS-3.3.2.1
FSRD-5660	SRS-3.3.2.1
FSRD-5661	SRS-3.3.2.1
FSRD-5662	SRS-3.3.2.1
FSRD-5663	SRS-3.3.2.1
FSRD-5664	SRS-3.3.2.1

Requirement Allocation Cross Reference Matrix	
Requirement ID	**Trace to SRS**
FSRD-5665	SRS-3.3.2.1
FSRD-5666	SRS-3.3.2.1
FSRD-5667	SRS-3.3.2.1
FSRD-5668	SRS-3.3.2.1
FSRD-5669	SRS-3.3.2.1
FSRD-5670	SRS-3.3.2.1
FSRD-5671	SRS-3.3.2.1
FSRD-5672	SRS-3.3.2.1
FSRD-5673	SRS-3.3.2.1
FSRD-5674	SRS-3.3.2.1
FSRD-5675	SRS-3.3.2.1
FSRD-5676	SRS-3.3.2.1
FSRD-5681	SRS-3.3.2.1
FSRD-5682	SRS-3.3.2.1
FSRD-5683	SRS-3.3.2.1
FSRD-5684	SRS-3.3.2.1
FSRD-5692	SRS-3.2.1.5
FSRD-6008	SRS-3.2.1.3
FSRD-6010	SRS-3.3.3.1
FSRD-6011	SRS-3.4.4.1, SRS-3.4.4.2, SRS-3.4.4.3, SRS-3.4.4.4
FSRD-6012	SRS-3.4.2.1, SRS-3.4.2.2, SRS-3.4.2.3, SRS-3.4.2.4
FSRD-6013	SRS-3.4.3.1, SRS-3.4.3.2, SRS-3.4.3.3, SRS-3.4.3.4
FSRD-6016	SRS-3.2.6.11
FSRD-6596	SRS-3.2.3.1
FSRD-6670	SRS-3.2.1.7
FSRD-6672	SRS-3.2.5.2
FSRD-6962	SRS-3.1.2
FSRD-6963	SRS-3.1.2
FSRD-6964	SRS-3.1.2
FSRD-6965	SRS-3.1.2
FSRD-6966	SRS-3.1.2
FSRD-6967	SRS-3.1.2
FSRD-6968	SRS-3.1.2
FSRD-6969	SRS-3.1.2
FSRD-6970	SRS-3.1.2
FSRD-6971	SRS-3.1.2
FSRD-6972	SRS-3.1.2
FSRD-6973	SRS-3.1.2
FSRD-6974	SRS-3.1.2
FSRD-6975	SRS-3.1.2

Requirement Allocation Cross Reference Matrix	
Requirement ID	**Trace to SRS**
FSRD-6976	SRS-3.1.2
FSRD-6977	SRS-3.1.2
FSRD-6978	SRS-3.1.2
FSRD-6979	SRS-3.1.2
FSRD-6980	SRS-3.1.2
FSRD-6981	SRS-3.1.2
FSRD-6982	SRS-3.1.2
FSRD-6983	SRS-3.1.2
FSRD-6984	SRS-3.1.2
FSRD-6985	SRS-3.1.2
FSRD-6986	SRS-3.1.2
FSRD-6987	SRS-3.1.2
FSRD-6988	SRS-3.1.2
FSRD-6989	SRS-3.1.2
FSRD-6990	SRS-3.1.2
FSRD-6991	SRS-3.1.2
FSRD-6992	SRS-3.1.2
FSRD-6993	SRS-3.1.2
FSRD-6994	SRS-3.1.2
FSRD-7038	SRS-3.3.2.1, SRS-3.3.2.2
FSRD-7069	SRS-3.1.3
FSRD-7074	SRS-3.2.6.11

5.0 PARTITIONING FOR PHASED DELIVERY

All of the requirements in this document are planned for Phase I or Phase II of the CoNNeCT project. Requirements have been prioritized as P1 (mandatory for launch), P2 (not mandatory for launch, but supports pre-launch testing), and P3 (can defer to after launch) for Phase I. Requirements will be implemented so that all P1 requirements are completed first, all P2 requirements next, and P3 requirements last. This should enhance mission success by ensuring the most critical requirements are implemented first and some of the desired and optional requirements may be completed after launch. Requirements prioritization is described in Appendix E.

APPENDIX A ACRONYMS AND ABBREVIATIONS

A.1 Scope

This appendix lists the acronyms and abbreviations used in this document.

A.2 List of Acronyms and Abbreviations

Table A-1—Acronyms

ADC	Analog-to-Digital Conversion
BER	Bit Error Rate
CCC	CoNNeCT Control Center
CCSDS	Consultative Committee on Space Data Systems
CoNNeCT	Communications, Navigations, and Networking reConfigurable Testbed
CSCI	Computer Software Configuration Item
DTN	Delay-Tolerant Networking
ELC	EXPRESS Logistics Carrier
EXPRESS	EXpedite the PRocessing of Experiments to Space Station
FCF	Fluid Combustion Facility
FPGA	Fixed Programmable Gate Array
FRAM	Flight Releasable Attachment Mechanism
FSRD	Flight System Requirements Document
GD	General Dynamics
GGT	Glenn-Goddard TDRS (Waveform)
GPS	Global Positioning System
GRC	Glenn Research Center
GSFC	Goddard Space Flight Center
GSW	Ground Software
HOSC	Huntsville Operations Support Center
HRDL	High-Rate Data Link
I/O	Input/Output
ION	Interplanetary Overlay Network
IP	Internet Protocol
ISS	International Space Station
JPL	Jet Propulsion Laboratory
LRDL	Low-Rate Data Link
LVDS	Low-Voltage Differential Signaling
MB	Megabytes
Mbps	Megabits per second
MRDL	Medium-Rate Data Link
MSFC	Marshall Space Flight Center
NEN	Near-Earth Network
NENUG	Near-Earth Network User's Guide
NISN	NASA Integrated Services Network
OE	Operating Environment
PAS	Payload Avionics Software

PEP	Payload Executive Processor
PI	Principal Investigators
PL MDM	Payload Multiplexer/Demultiplexer
PRBS	Pseudo-Random Bit Sequence
RF	Radio Frequency
ROM	Read-Only Memory
SCAN	Space Communications And Navigation
SDR	Software Defined Radio
SN	Space Network
SNUG	Space Network User's Guide
SRD	System Requirements Document
SRS	Software Requirements Specification
STRS	Space Telecommunications Radio Standard
TCP	Transmission Control Protocol
TDRSS	Tracking and Data Relay Satellite System
TReK	Tele-science Resource Kit
TRL	Technology Readiness Level
TWTA	Traveling Wave Tube Amplifier
WF	Waveform

APPENDIX B DEFINITIONS

B.1 Scope

This appendix lists the definitions used in this document.

B.2 List of Definitions

Table B-1—Definitions

Term	Definition
Commands	[GRC] Packets generated via TReK to be uplinked to payload • Anything that goes up (primary path or experimental path) • May include files • Delivered to payload via ELC 1553 (primary path) or SDR SpaceWire (experimental path)
Experiment Data	[GRC] All data generated by or pertaining to experiments • May include telemetry • Delivered to CCC via ISS High-Rate Data Link (primary path) or Wallops Island and White Sands ground links (experimental path)
Files	[GRC] Waveforms, configuration files, tar files, gimbal tables, software uploads, experiment data files, scripts. A finite set of consecutive bytes with a well-defined beginning and end, identified by a filename, file size, file type, and location in storage.
Health & Status Data	[SSP 52050] Information originating at the payload/subrack payload and passed to the PL MDM that provides the crew and ground confirmation of PL performance, operational state, resource consumption, and assurance that the PL is operating within safety guidelines as defined by the PL Safety Review Panel (PSRP) and the ISS Flight Rules. [GRC] Data sent to ISS to monitor system health by crew or HOSC • Defined by the project • Sent via ELC 1553 bus at a rate of once per second
Telemetry	[GRC] All data from subsystems, including Waveform parameters • Anything that comes down • Sent via ELC 1553 bus or Ethernet at a rate of once per second • May be part of experiment data
Low-Rate Telemetry	[SSP 52050] Sent over ELC 1553
High-Rate Telemetry	[SSP 52050] Sent over ELC Ethernet
User Data Rate	Uncoded data. Includes any framing overhead but before the implementation of coding.

APPENDIX C TBDs

C.1 Scope

This appendix lists all items in this document that need to be determined (TBD).

C.2 List of TBDs

Table C-1—TBDs

TBD Number	Information Needed	Document Paragraph	Date to Define
	GSRD Parent Req number missing in table (SRS-3.1.2)	3.1	Prior to Project CDR
	5 GSRD Parent Req numbers missing in table (SRS-3.2.1.1, SRS-3.2.1.2, SRS-3.2.1.4, SRS-3.2.1.6, SRS-3.2.1.7)	3.2.1	Prior to Project CDR
	2 GSRD Parent Req numbers missing in table (SRS-3.2.2.2, SRS-3.2.2.4)	3.2.2	Prior to Project CDR
	2 GSRD Parent Req numbers missing in table (SRS-3.2.3.1, SRS-3.2.3.2)	3.2.3	Prior to Project CDR
	GSRD Parent Req number missing in table (SRS-3.2.4.1)	3.2.4	Prior to Project CDR
	7 GSRD Parent Req number missing in table (SRS-3.2.6.3, SRS-3.2.6.5, SRS-3.2.6.7, SRS-3.2.6.8, SRS-3.2.6.9, SRS-3.2.6.10, SRS-3.2.6.15, SRS-3.2.6.16)	3.2.6	Prior to Project CDR
	GSRD Parent Req number missing in table (SRS-3.2.7.1)	3.2.7	Prior to Project CDR
	Requirements placeholder	3.3.4	Prior to Project CDR
	Requirements placeholder	3.3.5	Prior to Project CDR
	Requirements placeholder	3.3.6	Prior to Project CDR
	Requirements placeholder	3.3.7	Prior to Project CDR
	Requirements placeholder	3.4.5	Prior to Project CDR
	GSRD Parent Req number missing in table (SRS-3.5.1)	3.5	Prior to Project CDR
	GSRD Parent Req number missing in table (SRS-3.7.1)	3.7	Prior to Project CDR
	GSRD Parent Req number missing in table (SRS-3.9.1)	3.9	Prior to Project CDR
TBD-06	Need processing capability %, also Table 4-1	3.10.2, 4.0	Prior to Project CDR
	GSRD Parent Req number missing in table (SRS-3.11.1)	3.11	Prior to Project CDR
	Several Parent Req numbers missing in Table 4-1 (Reflects Section 3)	4.0	Prior to Project CDR

APPENDIX D NPR 7150.2 COMPLIANCE MATRIX FOR SWE-109

Requirement SWE-109 of NPR 7150.2 'NASA Software Engineering Requirements' levies a set of requirements that must be met by a project's SRS. The table below lists the NPR 7150.2 requirements for an SRS and the corresponding section(s) of this CoNNeCT Software Requirements Specification that address those requirements.

Table D-1—Traceability from SRS Template to SWE-109 of NPR 7150.2

SRS Section(s)	7150.2 Requirement
	The Software Requirements Specification shall include: [SWE-109]
1.2 System Overview	a. System overview.
3.2 Software Functional Requirements	b. CSCI requirements.
3.2x Software Function	(1) Functional requirements.
3.1 Required States and Modes	(2) Required states and modes
3.3 Software External Interface Requirements	(3) External interface requirements.
3.4 Software Internal Interface Requirements	(4) Internal interface requirements.
3.5 Software Internal Data Requirements	(5) Internal data requirements.
3.6 Adaptation Requirements	(6) Adaptation requirements.
3.7 Safety Requirements	(7) Safety requirements.
3.2x (CSCI Function)	(8) Performance and timing requirements.
3.8 Security and Privacy Requirements	(9) Security and privacy requirements.
3.9 CSCI Environment Requirements	(10) Environment requirements.
3.10 Computer Resource Requirements	(11) Computer resource requirements.
3.10.2 Computer Hardware Resource Utilization Requirements	(a) Computer hardware resource utilization requirements.
3.10.3 Computer Software Requirements	(b) Computer software requirements.
3.10.4 Computer Communications Requirements	(c) Computer communications requirements.
3.11 Software Quality Factors	(12) Software quality characteristics.
3.12 Design and Implementation Constraints	(13) Design and implementation constraints.
3.13 Personnel-Related Requirements	(14) Personnel-related requirements.
3.14 Training-Related Requirements	(15) Training-related requirements.
3.15 Logistics-Related Requirements	(16) Logistics-related requirements.
3.16 Packaging Requirements	(17) Packaging requirements.
3.17 Precedence and Criticality of Requirements	(18) Precedence and criticality of requirements.
4.0 Requirements Traceability and Verification Methods	c. Qualification provisions.
4.0 Requirements Traceability and Verification Methods	d. Requirements traceability and verification data.
5.0 Partitioning For Phased Delivery	e. Requirements partitioning for phased delivery.
3.12.d Design and Implementation Constraints	f. Testing requirements that drive software design decisions; e.g., special system level timing requirements/checkpoint restart.

APPENDIX E REQUIREMENTS PRIORITIZATION

P1: **Must Have** (the bare minimum that would allow us to operate on ISS, communicate with ISS, and upload new software to add new features)

- ELC Interfaces
  - 1553
  - Ethernet
  - Commanding (mandatory subset)
  - Health and Status Reporting (minimal telemetry – no SDR status)
  - File Upload to avionics
- Flash File System
- Updating to new Payload Avionics Software
- SDR Interface
  - Commanding of SDRs
  - Telemetry of SDRs
  - File download to and upload from the SDRs
  - Update SDR Software (OE and Waveforms)
- Minimal Payload Health / Status Monitoring
  - ADC
  - DIO
- State Machine
- Read payload time / time stamp all health and status data and telemetry data
- Safety Critical Software
  - Thermal Control (Payload safety critical)
  - Power control to TWTA & SDRs (ISS safety critical)

P2: **Should Have** (items that allow full payload operation but do not cover all experiments)

- ELC
  - Commanding (full set)
  - Telemetry (full set)
  - Health and status (full set)
  - File Upload / Download to SDRs and avionics
- Perform time synchronization to reference time (ISSbroadcast time)

P3: **Could Defer**

- Scripting
- BER algorithm – generating or testing done in the avionics
- Command and telemetry via SDRs (experimental path)
- API for PIs, experiment infrastructure
- Networking experiments

Incompressible Test List: (Must test on **ground** before shipping)

- Avionics hardware
  - 1553
  - Spacewire
  - Ethernet
  - All DIO & ADC
    - Monitoring
    - Power control
    - RF Switching
    - Heater
  - Memory – 64 GB Flash and memory on the processor card.
- SDRs
  - Command & Telemetry port (1553, Spacewire for Harris)
  - Data ports (Spacewire)
  - IO between SDR and Avionics
  - File upload to radio (OE & Waveforms)
- GCE and Antennas
  - 1553 command & telemetry
  - Gimbal control