ACME

Advanced Combustion via Microgravity Experiments

INTEGRATED SCIENCE REQUIREMENTS

RDR Version

Revision B

2013-JUNE-12

Five fundamental investigations using gas-fueled laminar diffusion flames

Burning Rate Emulator (BRE)

PI Prof. James G. Quintiere, University of Maryland
Co-I Prof. Peter B. Sunderland, University of Maryland

Coflow Laminar Diffusion Flame (CLD Flame)

PI Prof. Marshall B. Long, Yale University
Co-I Prof. Mitchell D. Smooke, Yale University

Electric-Field Effects on Laminar Diffusion Flames (E-FIELD Flames)

PI Prof. Derek Dunn-Rankin, University of California, Irvine
Co-I Dr. Zeng-Guang Yuan, National Center for Space Exploration Research (NCSER)

Flame Design

PI Prof. Richard L. Axelbaum, Washington University in St. Louis
Co-I Prof. Beei-Huan Chao, University of Hawaii
Co-I Prof. Peter B. Sunderland, University of Maryland
Co-I Dr. David L. Urban, NASA Glenn Research Center

Structure and Response of Spherical Diffusion Flames (s-Flame)

PI Prof. Chung K. Law, Princeton University
Co-I Prof. Stephen D. Tse, Rutgers University
Co-I Dr. Kurt R. Sacksteder, NASA Glenn Research Center

ACME Project Leadership

ACME Project Manager	J. Mark Hickman, NASA Glenn Research Center
ACME Project Scientist	Dennis P. Stocker, NASA Glenn Research Center
ACME Deputy Project Scientist	Dr. Fumiaki Takahashi, NCSER
BRE Project Scientist	Dr. Paul V. Ferkul, NCSER

Table of Contents

Introduction (*which includes no requirements*) **Page**
Signature page 3
Science Summary 5
ACME Hardware Concept 8
Nomenclature 9
Integrated Science Requirements
Requirement Sources (*which includes no requirements*) 11
1. Experiment Configuration Requirements 11
2. Monitoring Measurement Requirements 29
3. Science Diagnostic Requirements 31
4. Operational Requirements
4.1 CLD Flame 46
4.2 E-FIELD Flames 50
4.3 Flame Design 56
4.4 s-Flame 58
4.5 BRE 59
5. Test Matrices
5.1 CLD Flame 60
5.2 E-FIELD Flames 65
5.3 Flame Design 70
5.4 s-Flame 77
5.5 BRE 80
6. Success Criteria
6.1 CLD Flame 81
6.2 E-FIELD Flames 83
6.3 Flame Design 84
6.4 s-Flame 84
6.5 BRE 86
Appendices (*which include no requirements*)
A: Spherical Burner Design Reference 87
B: Coflow Burner Design Reference 89
C: Electric Field Design Reference 91
D: BRE Burner Design Reference 94
E: BRE Radiometer Design Reference 109

ACME

Advanced Combustion via Microgravity Experiments

INTEGRATED SCIENCE REQUIREMENTS

PREPARATION

Dennis P. Stocker, ACME Project Scientist

CONCURRENCE (continued)

Prof. Derek Dunn-Rankin, UC-Irvine
Electric-Field Effects on Laminar Diffusion Flames (E-FIELD Flames)

Prof. Marshall B. Long, Yale University
Coflow Laminar Diffusion Flame (CLD Flame)

Dr. Fumiaki Takahashi
ACME Deputy Project Scientist

Dr. David L. Urban, Chief
Combustion & Reacting Systems Branch

J. Mark Hickman
ACME Project Manager

CONCURRENCE

Prof. Richard L. Axelbaum
Washington University in St. Louis
Flame Design

Prof. Chung K. Law, Princeton University
Structure and Response of Spherical Diffusion Flames (s-Flame)

Prof. James G. Quintiere, U. Maryland
Burning Rate Emulator (BRE)

Dr. Paul V. Ferkul
BRE Project Scientist

Dr. Fred J. Kohl
ISS Research Project Manager

APPROVAL

Dr. Francis P. Chiaramonte
ISS Research Project Program Executive

Page is intentionally blank.

INTRODUCTION

Science Summary

The Advanced Combustion via Microgravity Experiments (ACME) project is now under development with a set of five independent experiments which are each focused on advancing combustion technology through fundamental research. Four of the current ACME experiments are specifically directed at addressing energy and environmental concerns, while the fifth experiment addresses fire prevention, especially for spacecraft. The overall goals are to improve our understanding of materials flammability, combustion at fuel lean conditions where both optimum performance and low emissions can be achieved, flame stability and extinction limits, soot control and reduction, oxygen enriched combustion which could enable practical carbon sequestration, and the use of electric fields for combustion control.

While distinct, the ACME experiments share several significant traits. The principal unifying feature of the experiments is their use of gaseous fuels (e.g., methane and ethylene) rather than liquid or solid fuels. With this in common, the experiments will be conducted within the Combustion Integrated Rack (CIR) through the use of a single modular insert. In addition to the fuel state, the current set of ACME experiments all use laminar, non-premixed (i.e., diffusion) flames for their studies. To simplify analysis, these flames are either one or two dimensional, depending upon the experiment.

With the exception of the Burning Rate Emulator (BRE) experiment discussed immediately below, the general goal of the current ACME experiments is to gain fundamental understanding that can enable improved efficiency and reduced emissions in practical combustion processes on Earth, for example through the development and verification of models for chemical kinetics and transport processes in computational simulations. In addition to enhanced performance, improved modeling capability can lead to reductions in the time and cost for combustor design. In summary, microgravity investigations of non-premixed flames could lead to eco-friendly combustion systems providing our nation with green power for the future.

Burning Rate Emulator (BRE)

Unlike the other current ACME experiments, the Burning Rate Emulator (BRE) experiment is focused on fire prevention, especially in spacecraft. Specifically, BRE's objective is to improve our fundamental understanding of materials flammability, such as extinction behavior and the conditions needed for sustained combustion, and to assess the relevance of existing flammability test methods for low and partial-gravity environments. A flat porous burner fed with gaseous fuel will simulate the burning of solid and liquid fuels, where measurements are made of the thermal feedback (i.e., to the burner) upon which the vaporization of condensed-phase fuels depend. A small number of gaseous fuels (including mixtures with inert gases) will be used to simulate the burning of fuels such as paper, plastic, and alcohol by matching properties such as the heats of combustion and gasification, the surface temperature, and smoke point.

Coflow Laminar Diffusion Flame (CLD Flame)
Research, especially including that already conducted in microgravity, has revealed that our current predictive ability is significantly lacking for flames at the extremes of fuel dilution, namely for sooty pure-fuel flames and dilute flames that are near extinction. The general goal of the Coflow Laminar Diffusion Flame (CLD Flame) experiment is to extend the range of flame conditions that can be accurately predicted by developing and experimentally verifying chemical kinetic and soot formation submodels. The dependence of normal coflow flames on injection velocity and fuel dilution will be carefully examined for flames at both very dilute and highly sooting conditions. Measurements will be made of the structure of diluted methane and ethylene flames in an air coflow. Lifted flames will be used as the basis for the research to avoid flame dependence on heat loss to the burner. The results of this experiment will be directly applicable to practical combustion issues such as turbulent combustion, ignition, flame stability, and more.

Electric-Field Effects on Laminar Diffusion Flames (E-FIELD Flames)
An electric field can strongly influence flames because of its effect on the ions present as a result of the combustion reactions. The direct ion transport and the induced ion wind can modify the flame shape, alter the soot or flammability limits, direct heat transfer, and reduce pollutant emission. The purpose of the Electric-Field Effects on Laminar Diffusion Flames (E-FIELD Flames) experiment is to gain an improved understanding of flame ion production and investigate how the ions can be used to control non-premixed flames. Outside reviewers concluded that the experiment "… will contribute to our critical understanding to our knowledge of combustion processes in the presence of electric fields." The experiment will be conducted with a simple gas-jet flame, where an electric field will be generated by creating a high voltage (up to 10 kV) differential between the burner and a flat circular mesh above (i.e., downstream of) the burner. Measurements, as a function of field strength and fuel dilution, will be made of the ion current through the flame and the flame's response time to electric forcing.

Flame Design
The primary goal of the Flame Design experiment is to improve our understanding of soot inception and control in order to enable the optimization of oxygen enriched combustion and the "design" of non-premixed flames that are both robust and soot free. An outside review panel declared that Flame Design "… could lead to greatly improved burner designs that are efficient and less polluting than current designs." Flame Design will investigate the soot inception and extinction limits of spherical microgravity flames, created in the same manner as for the s-Flame experiment. Tests will be conducted with various concentrations of both the fuel (i.e., ethylene or methane) and oxygen in order to determine the role of the flame structure on the soot inception. The effect of the flow direction on soot formation will be assessed by studying both normal flames and inverse flames, where in the latter case an oxygen/inert mixture flows from the spherical burner into a fuel/inert atmosphere. The Flame Design experiment will explore whether the stoichiometric mixture fraction can characterize soot and flammability limits for non-premixed flames like the equivalence ratio serves as an indicator of those limits for premixed flames.

Structure and Response of Spherical Flames (s-Flame)

The purpose of the Structure and Response of Spherical Flames (s-Flame) experiment is to advance our ability to predict the structure and dynamics, including extinction, of both soot-free and sooty flames. The spherical flame, which is only possible in microgravity, will be created through use of a porous spherical burner from which a fuel/inert gas mixture will issue into the CIR chamber. Flames will be ignited at non-steady conditions and allowed to transition naturally toward extinction. Tests will be conducted with various inert diluents, in both the fuel and chamber atmosphere. The fuel gases include hydrogen and methane for soot-free flames, and ethylene for sooty flames. One experiment objective is to identify the extinction limits for both radiative and convective extinction (i.e., at high and low system Damkohler numbers, respectively). Another objective is to determine the existence, onset, and nature of pulsating instabilities that have been theoretically predicted to occur in such flames with fuel/diluent mixtures that are above a critical Lewis number.

ACME Hardware Concept

The ACME-specific hardware will consist primarily of an insert for the Combustion Integrated Rack (CIR) with alternate burners, an avionics box, color camera(s), and miscellaneous items like gas bottles, filter cartridges, and igniters. Components that are likely to be mounted on the modular insert are listed here and shown in Figure 1 below.

1. exchangeable burner
2. gas delivery system for burner (supplemental to the FOMA)
3. retracting igniter (tentatively with part(s) specific to burner types)
4. high-voltage power supply and mesh electrode
5. lamp for reference images of the experiment configuration
6. translating thin-filament array for pyrometry in soot-free flames
   (removed or retracted for installation of the mesh electrode)
7. analog color camera to support experiment operations
8. various sensors for:
   8.1. temperature
   8.2. flame radiation and chemiluminescence
   8.3. ion current and electric potential for study of electric field effects

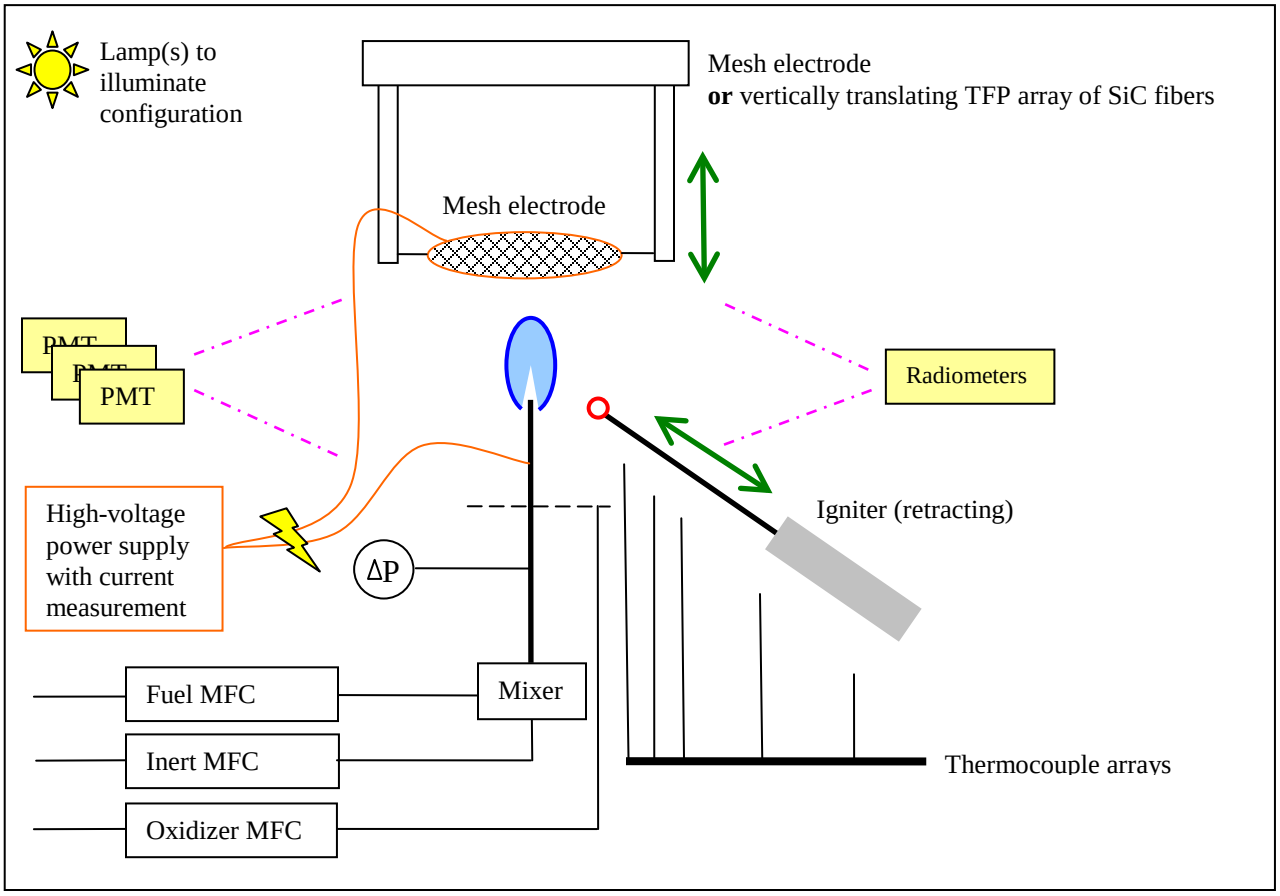

Figure 1. ACME insert concept, showing the study of electric field effects on a gas-jet flame.

There are four types of gas-fueled burners for the first set of ACME experiments: porous spherical burners, axisymmetric gas-jet burners, an axisymmetric coflow burner, and the BRE burners (which are instrumented with heat flux sensors).

Nomenclature

0g	microgravity
1g	normal (Earth) gravity
A	amp, amplitude
ACME	Advanced Combustion via Microgravity Experiments
BRE	Burning Rate Emulator, one of the ACME experiments and burner types
C	Celsius
C2H2	acetylene
C2H4	ethylene
cc	cubic centimeter
CCD	Charge-Coupled Device (e.g., for camera sensor)
CH4	methane
CIA	Chamber Insert Assembly (i.e., a CIR experiment insert)
CIR	Combustion Integrated Rack
cm	centimeter
CO	carbon monoxide
CO2	carbon dioxide
ELF	Enclosed Laminar Flames (a glovebox investigation conducted on STS-87)
FEANICS	Flow Enclosure Accommodating Novel Investigations in Combustion of Solids
FLEX	Flame Extinguishment Experiment
FOV	Field Of View (for imaging measurements)
fps	frames per second (for imaging requirements)
FWHM	Full Width at Half Maximum (measurement of the spectral width of a bandpass filter)
g	Earth gravity (9.8 m/s^2)
GCIP	Gas Chromatograph Instrumentation Package (for CIR)
GIU	Ground Interface Unit, e.g., for CIR
H2	hydrogen
H2O	water (e.g., vapor)
He	helium
HiBMs	High Bit-depth Multi-spectral (camera for CIR)
HV	High Voltage
Hz	Hertz (unit of frequency equivalent to 1/second)
I	current (e.g., ion current in E-FIELD Flames)
ISS	International Space Station
K	Kelvin
kV	kilovolt
LCTF	Liquid Crystal Tunable Filter (for use with HiBMs camera)
LSP	Laminar Soot Processes (an experiment conducted on STS-83, STS-94, STS-107)
m	meter
MAMS	Microgravity Acceleration Measurement System
MFC	mass flow controller
min	minute

mm	millimeter
ms	millisecond
N2	nitrogen
nm	nanometer
nozzle	gas-jet burner or central/core tube in coflow burner
O2	oxygen
ops	operations
ORU	Orbital Replacement Unit (i.e., exchangeable on orbit by an astronaut)
PaRIS	Passive Rack Isolation System (with which CIR is equipped to damp acceleration vibrations)
PIV	Particle Imaging Velocimetry
PMT	photomultiplier tube
qty	quantity
R_a	average roughness
R_{DA}	data acquisition resistance (for determination of ion current in E-FIELD Flames)
r_{min}	minimum radial distance from the spherical burner center to the flame edge
r_{max}	maximum radial distance from the spherical burner center to the flame edge
R_{sense}	resistance of shunt resistor (for determination of ion current in E-FIELD Flames)
ROI	Region Of Interest (in imaging measurements)
s	second
SAMS	Space Acceleration Measurement System
sccm	standard cubic centimeters per minute, where standard conditions are 0 ºC and 1 bar
SiC	silicon carbide
SLICE	Structure & Lifting In Combustion Experiment (an ISS glovebox investigation)
slpm	standard liters per minute, where standard conditions are 0 ºC and 1 bar
SPICE	Smoke Point In Coflow Experiment (an ISS glovebox investigation)
TGDF	Turbulent Gas-jet Diffusion Flames (an experiment conducted on STS-87)
TFP	Thin Filament Pyrometry
UV	ultraviolet
V	voltage (e.g., for determination of ion current in E-FIELD Flames)
µm	micrometer (i.e., micron)

INTEGRATED SCIENCE REQUIREMENTS

Requirement Sources

The primary sources for requirements are identified with superscripts as follows:

1	CLD Flame
2	E-FIELD Flames
3	Flame Design
4	s-Flame
5	BRE
*	Project Scientist, often reflecting general requirements
<#	Experiment #, but relaxed or altered by Project Scientist
>#	Requirement is more demanding than experiment #

Science Data End Products (SDEPs) corresponding to various science diagnostics are listed by the number-letter-number sequence below:

Experiment (number, see above)
Objective (letter)
SDEP (number)

An SDEP may be listed under any diagnostic that can provide at least some of the needed result. SDEPs are not listed for monitoring measurement of independent variables (e.g., flow rate).

Any subsequent text in italics is a comment and not a requirement.

1. Experiment Configuration Requirements

Non-measurement requirements are provided in this section.

1.1. General Requirements

1.1.1. The experimental hardware shall accommodate all of the burners described in sections 1.2-1.4 and 1.13, but only a single burner shall be installed at a time within the CIR chamber.*

1.1.2. All burners shall be Orbital Replacement Units (ORUs) and exchangeable during spaceflight.*

1.1.3. At least one duplicate of each burner shall be provided permanently to the Project Scientist *to support ground-based science testing at NASA or the PI institutions (i.e., where they will not be available for ACME crew training).* For any burners that are fabricated with different tube lengths which are otherwise identical, only one such burner is required for transfer to the Project Scientist.*

1.1.4. The gas delivery system and all burners shall be compatible with at least the following gases:

1.1.4.1. gaseous fuels: hydrogen, methane, ethane, propane, ethylene, propylene, or mixtures of any of these fuels;*

1.1.4.2. inert gases: nitrogen, carbon dioxide, helium, neon, argon, krypton, xenon, or mixtures of any of these inerts;*

1.1.4.3. mixtures of any fuel(s) and inert(s) identified above;*

1.1.4.4. oxygen mixtures with any of fuel(s) and/or inert(s) identified above, with oxygen concentrations of up to 85% on a volume (molar) basis. *Mixtures including both fuel(s) and oxygen will allow for future studies of premixed or partially pre-mixed flames.**

1.1.5. During testing, all CIR chamber contents shall be compatible with oxygen concentrations of up to 40% on a volume (molar) basis.*

1.1.6. All configuration requirements (i.e., section 1) apply simultaneously unless otherwise specified.*

1.2. **Spherical Burner** (Flame Design and s-Flame)

1.2.1. Each spherical burner shall include a porous sphere with a fixed outer diameter. The burner tip diameters shall be 6.4 mm (¼ inch), 9.5 mm (3/8 inch), and 12.7 mm (½ inch) where each is within ±0.3 mm and is measured and known within ±0.1 mm. *The burner size is not a variable in either the Flame Design or s-Flame experiments. The general preference is to use the smallest burner that will create a sufficiently spherical flame for the flow conditions. However, smaller burners tend to create flames that are less spherical. In ground-based testing, the Flame Design experiment has regularly used a ¼-inch burner, but the s-Flame experiment has often used a ½-inch burner.*[3,4]

1.2.2. Each spherical burner shall be fed gas via a single supply tube with*:

1.2.2.1. inner diameter that is large enough that the pressure drop in the tube is at most 20% of the pressure drop across the burner,[3,*]

1.2.2.2. outer diameter as small as possible (especially near the porous sphere) and of no more than 25% of the porous sphere diameter *where it is suggested that the outer diameter can increase beyond 25% of the sphere diameter at a radial position (from the sphere's center) of 50 mm or greater.*[<4,*]

1.2.2.3. length of at least 100 mm from the sphere's center.[3,4]

1.2.3. In 2.2 Second Drop Tower testing with conditions approved by the Project Scientist, each spherical burner shall produce a flame with r_{min}/r_{max} (where r_{min} and r_{max} are relative to the burner center, not flame center) exceeding 0.8 and as close to 1.0 as possible, neglecting the region within 20º of burner tube, as seen from two orthogonal directions. *It is possible to eliminate particularly bad burners through prescreen testing conducted in a chamber in normal gravity using conditions selected to reduce buoyant effects. For Flame Design, the microgravity acceptance testing would best be conducted under flame "B" conditions (fuel/inert flowing into a pure oxygen atmosphere), where the second*

choice is flame "C" conditions (pure oxygen flowing into a fuel/inert atmosphere) where the flame is diluted so that it is less sooty.[3,<4]

1.2.4. The spherical burner shall be positioned such that*:

1.2.4.1. supply tube axis is coincident with the CIR chamber axis within ±2 mm (i.e., along its length) and orthogonal to the CIR chamber window axes.[3,*]

1.2.4.2. sphere's center is optionally positioned within ±2 mm at either (1) the intersection of the CIR chamber and window axes or (2) 30 mm from the intersection of the CIR window axes, i.e., 30 mm "downward" in the direction of the supply tube, where position #1 is the default position. *It is suggested that this could be accomplished by having pairs of burners tips where the tubes differ in length by 30 mm.*[>3,*]

1.2.5. The internal (i.e., fluid) volume of the burner from the last upstream solenoid valve(s) to the porous sphere, including the (differential) pressure transducer, shall be no more than 10 cc and as small as possible. *Note that the differential pressure transducer shall be downstream of the last solenoid valve(s) as described in 2.4.1. It is suggested that the various spherical burners could attach via a quick connect to a single inlet plenum which is equipped with the required solenoid valve and pressure transducer.*[3,*]

1.2.6. The burners shall be fabricated using stainless steel tubing *to match burners used in ground-based testing (e.g., in regard to heat transfer, catalysis, etc.).**

1.2.7. Within 75 mm of its center, the burner - including the supply tube - shall be capable of withstanding temperatures of at least 0 to 450 ºC. *This temperature limit was based on thermal degradation of the fuel and may restrict options in the sealing of the porous spheres to the burner tubes, e.g., preventing the use of epoxy (as has been used for Flame Design in their ground-based testing). It is anticipated that the burner temperature will be 100 ºC or less in the s-Flame experiment.*[3,4]

1.2.8. See 3.4.1 for the requirements to measure the burner temperature.[3,4]

1.3. **Gas-Jet Burner** (E-FIELD Flames)

1.3.1. Each gas-jet burner shall consist of a straight tube of a constant internal cross-section, where different burners have different diameters and perhaps different cross-sectional shapes. *This could be accomplished by having the tube mounted in a VCO (or similar) blind nut or body that has been drilled through to accommodate the nozzle. It is suggested that the various gas-jet burners could be mounted in the same manner as the spherical burners, e.g., with a quick connect attachment to a common plenum.**

1.3.2. The straight tube of constant internal cross-section in a gas-jet burner shall be at least 40 times greater in length than the inner diameter (or width) *to create a parabolic velocity profile at the nozzle tip.**

1.3.3. The plane defined by the nozzle tip shall be orthogonal to the burner tube axis.*

1.3.4. The gas-jet burners shall include at least the following cross-sectional shapes and sizes:*

1.3.4.1. Circular, 0.4±0.1 mm inner diameter, 0.8±0.1 mm outer diameter *to nominally match nozzles for LSP (STS-107) and SPICE (ISS)**

1.3.4.2. Circular, 0.8±0.1 mm inner diameter, 1.2±0.1 mm outer diameter *to nominally match nozzles for LSP (STS-107) and SPICE (ISS)**

1.3.4.3. Circular, 1.3±0.1 mm inner diameter, 1.6±0.1 mm outer diameter *to nominally match a nozzle used in ground-based testing*[2]

1.3.4.4. Circular, 1.6±0.1 mm inner diameter, 2.0±0.1 mm outer diameter *to nominally match nozzles for SPICE (ISS), LSP (STS-83, STS-94, STS-107), TGDF (STS-87), and ELF (STS-87)**

1.3.4.5. Circular, 2.1±0.1 mm inner diameter, 2.4±0.1 mm outer diameter *to match the inner tube in the ACME coflow burner*[2]

1.3.4.6. Circular, 2.7±0.1 mm inner diameter, 3.1±0.1 mm outer diameter *to nominally match a nozzle for LSP (STS-83, STS-94)**

1.3.4.7. Circular, 3.2±0.1 mm inner diameter, 3.6±0.1 mm outer diameter *to nominally match a nozzle for SLICE (ISS)**

1.3.5. Each nozzle's inner diameter and outer diameter (at the tip) shall be measured and known to within ±0.05 mm.*

1.3.6. The burner's outer dimension(s) shall be minimized within 100 mm of the outlet but can be greater than specified in 1.3.4 at distances of 10 mm or more upstream from the tip, *e.g., for rigidity. Note that greater inner diameters are also allowed as long as requirement 1.3.2 is met, so a common approach for small nozzles is to transition to larger tubing upstream from the burner tip.**

1.3.7. Each nozzle shall be internally and externally smooth with an average roughness of no more than 100 μm. The tip shall be free of burs and sharp edges and smoothed to an average roughness of no more than 20 μm *to prevent turbulence and reduce the likelihood of corona discharges when there is an electric field*.[2]

1.3.8. Each gas-jet burner shall be positioned such that*:

1.3.8.1. burner axis is coincident with the CIR chamber axis within ±2 mm (i.e., along its length) and orthogonal to the CIR chamber window axes,*

1.3.8.2. plane of the CIR chamber window centers is optionally either (1) 10±2 mm or (2) 30±2 mm downstream of (i.e., above) the burner outlet, where option #1 is the default position. *It is suggested that this can be accomplished by having pairs of nozzles where the tubes differ in length by 20 mm.**

1.3.9. Unless otherwise specified, each gas-jet burner shall be fabricated from stainless steel tubing *to match nozzles used in ground-based and past space-based testing (e.g., in regard to heat transfer, catalysis, etc.).**

1.3.10. Within 50 mm of its tip, each gas-jet burner shall be capable of withstanding temperatures of at least 0 to 1000 ºC.*

1.3.11. See 1.5 for the electrical requirements for the burner.[<2]

1.3.12. See 3.4.1 for the requirements to measure the burner temperature.[2]

1.4. **Coflow Burner** (CLD Flame, E-FIELD Flames, and Flame Design)

1.4.1. The axisymmetric coflow burner shall consist of a small inner tube (normally for fuel or fuel/inert mixtures) within a larger outer "tube" where the coflow gas (e.g., air) flows through the annulus between the tubes. The outer coflow "tube" does not need to have a constant cross-section but can be smoothly converging (toward the outlet). *The use of a smoothly converging nozzle, with no steps or other rapid changes, can minimize the boundary layer on the nozzle's inner wall. However, testing and analysis at NASA Glenn for the E-FIELD Flames experiment has revealed that the ACME velocities are too low for the nozzle to significantly reduce the boundary layer.**

1.4.2. The inner and outer tubes shall be concentric within ±0.3 mm along their common length.[1,*]

1.4.3. The burner annulus shall have a gas permeable outlet surface (e.g., honeycomb, mesh) across the annulus and 3±0.1 mm upstream of (i.e., below) the inner tube's outlet. The annular outlet surface and inner tube tip (i.e., outlet) shall both be orthogonal to the burner axis and flat to within ±0.1 mm (neglecting the cells or similar openings). *Testing at Yale and NASA Glenn suggests that a fine honeycomb can be superior as an outlet surface to both mesh and sintered porous metal in creating an axisymmetric flow and flame.* [>1,*]

1.4.4. The outlet of the outer tube shall be 0.0 to 0.5 mm downstream of the burner's outlet surface.[1,2,*]

1.4.5. The inner tube shall have a 2.1±0.1 mm inside diameter and a 2.4±0.1 mm outer diameter *where the thin wall helps minimize the "dead space" (where gas is not exiting) in the radial flow profile at the burner outlet*. The inner tube's inner diameter shall be constant for a length of at least 40 times the inner diameter *to create a parabolic velocity profile*. At 10 mm or more upstream of the burner outlet, the wall thickness can increase from the specified value, *e.g., to stiffen the tube*. The inner tube's inner diameter and outer diameter (at the tip) shall be measured and known to within ±0.05 mm.[<1,*]

1.4.6. The inner tube shall be internally and externally smooth with an average roughness of no more than 100 μm. The tip shall be free of burs and sharp edges and smoothed to an average roughness of no more than 20 μm *to prevent turbulence*.[2,*]

1.4.7. The internal (i.e., fluid) volume of the burner's inner tube from the last upstream solenoid valve(s) to the porous sphere, including any pressure transducer(s), shall be no more than 10 cc and as small as possible. *A larger volume between the mass flow controllers and burner outlet increases the time necessary to change between different experimental flow conditions. Minimizing that volume will help to minimize the changeover time between two flow conditions.*[1]

1.4.8. At the burner outlet, the outer tube shall have an inner diameter of 25±0.5 mm. At the burner outlet, the outer tube's inner diameter shall be measured and known to within ±0.1 mm.[1]

1.4.9. The burner shall have a uniform flow profile that is axisymmetric, i.e., where the velocity is independent of the angular position, especially (at radial positions) near the burner center. For the coflow burner, axisymmetric flow means that the variation in axial velocity with angular position (e.g., as measured in 1.4.11) shall be less than 10% of the (mean) velocity, where this shall hold for all radial positions from 0 to 10 mm. *For example, the axial velocities measured on the two sides (i.e., left and right) of a diameter shall match within 10% of the (mean) axial velocity at the same radial distance.* The burner gas shall be ejected parallel to the chamber axis and without either swirl (i.e., helically rotating flow) or turbulence (i.e., eddies). To be without turbulence, the axial velocity at any position 0.5 mm downstream of the burner (e.g., as measured in 1.4.11) shall be constant with time within 3% (i.e., of the time-averaged value). *The use of honeycomb for the burner outlet will ensure that there is no swirl and that the flow is ejected parallel to the burner axis. Turbulence can be mitigated by avoiding non-uniformities, wakes, and flow separation.*[1,*]

1.4.10. The coflow boundary layers outside the inner tube and inside the outer tube shall be minimized for velocities up to 50 cm/s as verified through measurements (with measurements within 0.5 mm downstream of the inner tube outlet) that are similar to those specified in 1.4.11. [1,*]

1.4.10.1. The boundary layer thickness for the inner tube shall be determined as the distance from the inner tube wall (into the annulus) to the position where the measured velocity reaches 90% of the plug flow value (i.e., computed from the flow) and that distance shall be less than 0.75 mm and as small as possible.[<1,*]

1.4.10.2. The boundary layer thickness for the outer tube shall be determined as the distance from the outer tube wall (into the annulus) to the position where the measured velocity reaches 90% of the plug flow value (i.e., computed from the flow) and that distance shall be less than 3 mm and as small as possible.[1,*]

The boundary layers can be reduced for velocities up to 35 cm/s with the use of a minimum of two seamless Haynes 214 honeycomb disks of cell size 1/64 in. that are at least 1/4 in. thick. Unfortunately, that honeycomb has not been readily available recently, but acceptable results can be obtained with the 1/32 in. cell size. The first honeycomb disk could be placed above the coflow entrance and the second honeycomb disk at the burner exit. Special care should be taken to ensure that any penetrations of the inner tube through honeycomb are symmetric. This might be accomplished through careful cutting of the honeycomb, either with a tight fit around the central tube or with a symmetric gap comparable in size to the cell size of the honeycomb. The lifted flames, as planned for these experiments, are very sensitive to minor inconsistencies that can result (for example) in cutting the honeycomb. While honeycomb (of sufficient thickness as compared to the cell

size) prevents swirl, other material such as layer(s) of mesh can be used to reduce the boundary layer.[<1,*]

1.4.11. The burner's flow profile, across a plane orthogonal to the burner axis and within 0.5 mm downstream of the inner tube outlet, shall be well documented. The spatial uniformity shall be verified by 1g measurement of the velocity field using a cold flow (i.e., with no flame) simultaneously through both the annulus and the inner tube. The axial velocity shall be measured across a diameter of 30 mm at increments of no greater than 5 mm, especially within 5 mm of the burner axis where the increments shall be no greater than 1 mm. Unless otherwise specified, measurement across one diameter is sufficient. *Smoke wire imaging with air flowing through both the inner tube and annulus is suggested as a way to characterize the burner flow. Another option is hot-wire anemometry.*[1,*]

1.4.11.1. The flow profile shall be measured for a range of flow velocities in 10 cm/s increments from 20 to 50 cm/s where the inner tube and annulus velocities are matched.[1,*]

1.4.11.2. For the case of matched velocities at 10 cm/s, the flow profile shall be measured for at least four diameters (as just described) at increments of no greater than 45 degrees *to ensure the axisymmetry of the flow for at least one flow condition.*[1,*]

1.4.11.3. The flow profile shall also be measured where the inner tube and annulus (i.e., outer tube) velocities are not matched for the following 11 velocity pairs: 0:10, 0:20, 0:30, 0:40, 0:50, 10:30, 10:50, 30:10, 30:50, 50:10, and 50:30 where each velocity pair is given as inner:outer and the values are in cm/s.[1,*]

1.4.12. The coflow flame shall be axisymmetric over the full range of flow conditions. To be axisymmetric, (1) the variation in the radius of the visible flame edge with angular position shall be less than 10% of the (mean) radius for all axial positions from the flame base to tip, and (2) the plane of the flame's visible base shall be orthogonal to the burner axis such that the variation in axial distance from the visible flame base to the burner outlet (along the circumference of the base) is no more than 1 mm, *especially for lifted flames, where the flame is detached and downstream from the burner outlet. For an example of criteria #1, the flame radii measured on the two sides (i.e., left and right) of a flame image shall match within 10% of the (mean) radius at the same axial position.* The axisymmetry of a 50/50 CH4/N2 flame shall be demonstrated in 1g for a range of flow velocities in 10 cm/s increments from 10 to 50 cm/s where the inner tube and annulus velocities are matched. The flame axisymmetry shall be demonstrated for a limited set of those conditions (specified by the Project Scientist) in drop tests.[2]

1.4.13. The coflow burner shall be positioned such that*:

1.4.13.1. burner axis is coincident with the CIR chamber axis within ±2 mm and orthogonal to the CIR chamber window axes,*

1.4.13.2. plane of the CIR chamber window centers is 12±2 mm downstream of (i.e., above) the inner tube outlet.[1,*]

1.4.14. The inner tube shall be fabricated from stainless steel tubing *to match nozzles used in ground-based and past space-based testing (e.g., in regard to heat transfer, catalysis, etc.).**

1.4.15. Within 50 mm of the center of the burner outlet, the burner shall be capable of withstanding temperatures of 0-1000 ºC, *though only minimal heat transfer to the burner is expected in most CLD Flame testing.*[<1]

1.4.16. See 1.5 for the electrical requirements for the burner.[2]

~~1.4.17. See 3.4.1 for the requirements to measure the burner temperature.[2]~~

1.5. **Burner as Electrode** (E-FIELD Flames)

1.5.1. Each gas-jet, coflow, and BRE burner shall have a resistance of less than 1 Ohm along its length and each coflow burner shall have a resistance of less than 1 Ohm across its entire outlet surface, such that each of these burners is electrically conductive and at a nearly uniform potential. The spherical burners do not need to meet such as requirement. *Each of gas-jet and coflow burner must be electrically conductive so that it is not an obstruction to the ion current, but rather a pathway.*[2]

1.5.2. Neglecting wiring associated with the burner temperature measurement, the burner shall be electrically insulated from any mechanism that supports it within the chamber. An exception is the spherical burners which do not need to meet this requirement.[2]

1.6. **Electrode Mesh** (E-FIELD Flames)

1.6.1. The flat, circular electrode mesh shall be composed of copper mesh with 16 to 22 wires per 25.4 mm (1 inch) with a wire diameter of 0.38 to 0.64 millimeters (0.015 to 0.025 inches).[2]

1.6.2. The edge of the mesh electrode shall be electrically attached (e.g., soldered) to a copper ring with a 2 to 3 mm cross-sectional diameter. The cross-sectional diameter shall be measured and known within ±0.2 mm. To the extent possible, the edge shall be smooth and free of burs and sharp edges, *to reduce the likelihood of electrical discharge (e.g., arcing). This might be best accomplished by machining a groove into the copper ring in which the mesh can be set for soldering. Otherwise, any prongs on the edge of the mesh should be smoothed off.*[2]

1.6.3. The ring forming the edge of the electrode mesh shall have an outer diameter of at least 80±1 mm and as large as possible, but where the axial distance from the burner tip to the electrode mesh (see 1.6.5) shall be shorter than the distance between the electrode mesh and any other conductive surface. The outer diameter of the ring shall be known to ±1 mm.[2]

1.6.4. The electrode mesh shall be positioned so that its center is on the CIR chamber axis (and thus the burner axis) within ±2 mm and it is orthogonal to the CIR chamber axis within ±3 degrees.*

1.6.5. The electrode mesh shall be optionally positioned at either (1) 25±1 mm or (2) 40±1 mm downstream (above) of the intersection of the CIR chamber window axes, where position #1 is the default position. *It is suggested that the use of a translating device would allow the electrode mesh to be positioned in a continuum of positions (e.g., from 35-100 nm downstream of the burner outlet), providing more flexibility for the experiment, and potentially allowing removal of the mesh from the flame in other experiments.*[2]

1.6.6. The electrode mesh shall be an ORU and removable from the ACME Chamber Insert Assembly (CIA) during spaceflight.*

1.7. **Electric Field** (E-FIELD Flames)

It was suggested that the electric field be generated with a pair of 20 kV power supplies connected by the UltraVolt Application, "Polarity Reversing Configurations of UltraVolt HVPSs" which is at: http://www.ultravolt.com/product/application-notes/ap-19 and included in the appendix of this document.

1.7.1. The electric field generator shall be capable of producing a high-voltage DC field in the range of at least -10 kV to +10 kV with an accuracy of ±0.1% of the set point. *It is suggested that the accuracy may rely in part on preflight ground calibration.*[2]

1.7.2. During operation of the electric field, it shall be possible to cause step change(s) in the voltage potential of up to 100 volts and 10 kV with rise times of no more than 10 and 200 ms (as measured from 10% to 90% of the change in potential, *i.e., where the initial and final transients are ignored*), respectively, and as short as possible. The response times shall be verified through the pre-launch characterization of the electric field specified in requirement 1.7.9. The field generator shall be capable of steps of any polarity (i.e., steps up or down) and magnitude of no more than 10 kV. *For example, this would enable a stepped ramping of the voltage.* [<2]

1.7.3. With a sequence of voltage step changes (see 1.7.2), it shall be possible to alternately increase and decrease the voltage potential, i.e., in a rectangular wave, at a selectable frequency between 0-1 Hz for the voltage range and accuracy specified in 1.7.1 and step magnitudes of no more than 10 kV. *This operation would approximately mimic an AC field. It is suggested that the accuracy may rely in part on preflight ground calibration.* [<2]

1.7.4. The capability to vary the voltage potential, in both sign and magnitude, to uplinked values is required, as is the capability to vary and specify – via uplink - a sequence of step changes, including the timing, as described in 1.7.2 and 1.7.3. [2]

1.7.5. Without exception, nothing electrically conductive shall come into contact with the burner (other than for the burner temperature and heat flux measurements specified in 3.4.1 and 3.10, respectively) or electrode mesh when the electric field is active.[2]

1.7.6. Without exception, a cylindrical zone between the burner outlet and the electrode mesh, and coaxial with both, shall be kept free of any electrically conductive

objects during operation of the electric field. The zone's diameter shall be at least 30 mm greater than the electrode mesh diameter, and the zone will extend axially from the burner outlet to at least 20 mm downstream of the electrode mesh.[2]

1.7.7. With an electric field of both -10±0.1 kV and +10±0.1 kV combined with an axial distance of 35±2 mm between the electrode mesh and the burner, the current leakage measured in air (at 1 bar absolute) shall be <100 nanoamps and as small as possible. *It is suggested that this can be accomplished by insulating the electrode mesh from any mechanism that supports it within the chamber, where the combined resistance of the insulation is no less than 200 giga-ohms. The electrical insulators should be capable of withstanding 20 kV without breaking down. The indicated voltage is twice that of the electric field (specified in 1.7.1), providing a safety factor of 2.* [2,*]

1.7.8. The high voltage power supplie(s) and associated electronics shall be ORU(s) and removable from the ACME CIA during spaceflight *to maximize the free volume within the chamber and increase the ability to accommodate future experiments*.*

1.7.9. The response time of the electric field shall be characterized prior to launch *to prepare a data analysis approach which isolates the response of the flame to the electric field from the response time of the electric field itself.* The response time shall be assessed without a flame or any gas flow but in ambient air with the electrode mesh 50±1 mm downstream (if gas were flowing) of a gas jet burner with a 2.1-mm inner diameter. The response time shall be assessed by measuring both the actual voltage of the electrode mesh (see 2.5) and the ion current (see 3.8) as a function of time (where both are measured with a sampling rate of at least 500 samples/s and as fast as possible *where this rate is in excess of that specified in 2.5 and 3.8*) and comparing those results with the specified (i.e., desired) voltage. The characterization shall include measurements for the following sequences:

1.7.9.1. At a frequency of 1 Hz and for step sizes of 1.0, 2.0, 5.0, and 10.0 kV (*i.e., in 4 tests total*), make steps upward (i.e., increasing the potential) from 0.0 kV to 10 kV, downward to -10.0 kV, and then upward again to 0.0 kV.*

1.7.9.2. At a frequency of 1 Hz, make the following step changes: 0.0 kV to -5.0 kV to 5.0 kV to -5.0 kV to -4.0 kV to 4.0 kV to -4.0 kV to -3.0 kV to 3.0 kV to -3.0 kV to -2.0 k to 2.0 kV to -2.0 kV to -1.0 k to 1.0 kV to -1.0 kV 0.0 kV.[>2,*]

1.7.9.3. At frequencies of 1 Hz, 5 Hz, 10 Hz, and 20 Hz (*i.e., in 4 tests total*), make 100-volt steps upward (i.e., increasing the potential) from 0.0 kV to 10 kV, downward to -10.0 kV, and then upward again to 0.0 kV.[>2,*]

1.7.9.4. For frequencies of at least 1 Hz, 10 Hz, and 100 Hz (*i.e., in 3 tests each*) and a duration of at least 100 cycles, create a rectangular wave by alternately increasing and then decreasing the potential with equal high-potential and low-potential durations (equivalent to one half of the inverse of the frequency, e.g., 0.025 s for 20 Hz) between each of the following: 0.0 and 0.1 kV, 0.0 and -0.1 kV, 0.0 and 0.5 kV, and 0.0 and -0.5 kV (*i.e., in 12 tests total*).[>2,*]

1.8. Gas Supply

The list of source gases below assumes the capability to (1) dilute fuels and oxidizers on orbit, and (2) use oxidizers with concentrations exceeding the maximum oxygen concentration limit within the CIR chamber (if the bottle volume is sufficiently small that the oxygen concentration or pressure that would result from a complete release would be too low to be a fire risk). The list of source gases below should be interpreted as a minimum requirement. It is acceptable to fly additional gases where that may be advantageous for operations or meeting other requirements.

1.8.1. The following source gas compositions are required, where mixtures are given on a volume (molar) basis*:

1.8.1.1.	fuels	100% H2, 100% CH4, 100% C2H4 44.4/55.6 H2/CH4, 55.6/44.4 H2/CH4, 66.7/33.3 H2/CH4*
1.8.1.2.	oxidizers	85/15 O2/N2, 50/50 O2/N2, 40/60 O2/N2, 30/70 O2/N2, 21/79 O2/N2, 40/60 O2/He*
1.8.1.3.	inerts	100% N2, 100% He*

1.8.2. The following additional source gas compositions are necessary for desired testing, where mixtures are given on a volume (molar) basis*[,3,4]:

1.8.2.1.	fuels	none*
1.8.2.2.	oxidizers	85/15 O2/CO2, 40/60 O2/CO2*[,3,4]
1.8.2.3.	inerts	100% CO2*[,3,4]

1.9. Burner Gas Delivery

It is suggested that the gas delivery be controlled with an exchangeable set of mass flow controllers, where a good candidate may be the Hastings HFC-D-302 because of its auto-zero function, high accuracy, and reasonable response time.

1.9.1. The gas delivery system shall be capable of simultaneously delivering any or all of the following source gases – fuel, oxidizer, and inert - to a **BRE, gas-jet, or spherical burner** *allowing for dilution in studies of normal, inverse, non-premixed, and premixed flames*. The gas delivery system shall be capable of providing the burner with a mixture of source gases with an uplinked composition.*

1.9.2. The gas delivery system shall be capable of simultaneously delivering each of the following source gases – fuel, oxidizer, and inert - to either the inner tube or the annulus of the **coflow burner** *allowing for dilution in studies of normal or inverse flames (although not necessarily dilution of both inner and annular streams).* The gas delivery system shall be capable of providing the inner or annular streams with a mixture of source gases with an uplinked composition.*

1.9.3. The composition of any mixture shall be controlled to within ±0.01 mole fraction and as accurately as possible. The mixture composition (i.e., gas concentrations) ejected from the burner shall be known as a function of time on a 1 second basis (i.e., second by second) or less, *for example, through knowledge of the system response time.* The gases shall be well mixed, *e.g., by providing for an adequate mixing length (or time).*[3,*]

1.9.4. The capability to vary all gas flow rates independently and set them to uplinked set values is required. Each gas flow rate shall be controlled within ±5% of its set point and as accurately as possible. Shutoff capability is required for all gases. *Flames are highly dependent on the burner flow and most mass flow controllers have an uncertainty based on the full flow, where a typical value is 1% of the full scale flow. Like many instruments, the accuracy is poor at very low values compared to full scale. This requirement effectively limits the useful range of a typical flow controller (with 1% full scale uncertainty) from 20% to 100% of the flow. Given the wide range of required flows (as specified in the test matrices) and the upmass and operational constraints, the design of the flow control is especially important for this experiment.*[<3]

1.9.5. The flow system shall provide the following range of flows of the following source gases to the burner(s)*:

1.9.5.1. **CLD Flame** - coflow burner [1]
- 1.9.5.1.1. fuel 0 to 0.2 slpm (on a N2 basis) [1]
- 1.9.5.1.2. oxidizer 0 to 15 slpm (on a N2 basis) [1]
- 1.9.5.1.3. inert 0 to 0.1 slpm (on a N2 basis) [1]

1.9.5.2. **E-FIELD Flames** - gas-jet burner(s) [2]
- 1.9.5.2.1. fuel 0 to 0.1 slpm (on a N2 basis) [2]
- 1.9.5.2.2. oxidizer *not applicable* [2]
- 1.9.5.2.3. inert 0 to 0.05 slpm (on a N2 basis) [2]

1.9.5.3. **E-FIELD Flames** - desired testing: coflow burner [2]
- 1.9.5.3.1. fuel 0 to 0.1 slpm (on a N2 basis) [2]
- 1.9.5.3.2. oxidizer 0 to 2.0 slpm (on a N2 basis) [2]
- 1.9.5.3.3. inert 0 to 0.05 slpm (on a N2 basis) [2]

1.9.5.4. **Flame Design** - spherical burner [3]
- 1.9.5.4.1. fuel 0 to 0.3 slpm (on a N2 basis) [3]
- 1.9.5.4.2. oxidizer 0 to 3.0 slpm (on a N2 basis) [3]
- 1.9.5.4.3. inert 0 to 10 slpm (on a N2 basis) [3]

~~1.9.5.5. **Flame Design** - desired testing: coflow burner with normal flames [3]~~
- ~~1.9.5.5.1. fuel 0 to 0.3 slpm (on a N2 basis) [3]~~
- ~~1.9.5.5.2. oxidizer 0 to 20 slpm (on a N2 basis) [3]~~
- ~~1.9.5.5.3. inert 0 to 2.0 slpm (on a N2 basis) [3]~~

~~1.9.5.6. **Flame Design** - desired testing: coflow burner with inverse flames [3]~~
- ~~1.9.5.6.1. fuel 0 to 2 slpm (on a N2 basis) [3]~~
- ~~1.9.5.6.2. oxidizer 0 to 2 slpm (on a N2 basis) [3]~~
- ~~1.9.5.6.3. inert 0 to 20 slpm (on a N2 basis) [3]~~

1.9.5.7. **s-Flame** - spherical burner(s) [4]
- 1.9.5.7.1. fuel 0 to 0.5 slpm (on a N2 basis) [4]
- 1.9.5.7.2. oxidizer *not applicable* [4]
- 1.9.5.7.3. inert 0 to 1 slpm (on a N2 basis) [4]

1.9.5.8. **BRE** - BRE burner[5]
- 1.9.5.8.1. fuel 0 to 1 slpm (on a N2 basis) [5]
- 1.9.5.8.2. oxidizer *not applicable* [5]
- 1.9.5.8.3. inert 0 to 1 slpm (on a N2 basis) [5]

1.9.6. The flow system shall be capable of providing gases to burner at the maximum flow rates specified in 1.9.5 for at least 60 s.*,>4

1.9.7. Neglecting flame heating and burner heating, if any, the burner gas shall be delivered at 300K±10 K.[4]

1.9.8. The burner gas shall be dry and the net amount of trace contaminants shall be less than a mole fraction of 0.001 and as small as possible.[3,*]

1.10. Ignition

While hot-wire igniters have been effectively used in many combustion experiments, special care is required for ACME because of the testing with elevated oxygen (for the Flame Design experiment) which leads to higher flame temperatures which in turn could significantly shorten igniter life. Hot Surface Ignition (HSI), which is often used in furnaces, may be better for ACME than hot-wire ignition.

1.10.1. The igniter shall reliably ignite all initial flow conditions. Reliable ignition shall be verified in 1g at the limiting (i.e., extreme) conditions in the test matrices for each burner within 1 s of igniter activation. *For the spherical and BRE burners, it is suggested that the ignition occur at about 3 mm from the burner outlet. For the gas-jet, coflow, and BRE burners, the ignition should occur within the mixing layer between the fuel and oxidizer (and not centered on the burner axis).*[3,4,*]

1.10.2. Hydrodynamic disturbance from igniter insertion and retraction shall be minimized by inserting the igniter at least 30 s prior to ignition, and removing it from the free area within 0.5 s after ignition detection. The igniter retraction time is a required example, where it shall be possible to vary that time as described in ACME's Science Operations Requirements Document (SORD). *The disturbance can be minimized through a linear rather than a sweeping retraction, and by limiting the speed of the retraction (because a rapid retraction could disturb the flame).*

1.10.3. The igniter energy output shall be variable and minimized *to ensure minimal effects on subsequent flame behavior and avoid igniter burnout. As one example of implementation, the igniter should not be energized longer than required.*[3,*]

1.10.4. The capability to vary the ignition duration and set it to an uplinked value between 0 and 10 s is required.*

1.11. Ambient Environment

1.11.1. The capability to vary the gas composition within the CIR chamber and set it to an uplinked composition is required *(where the uplinked composition could be a set of partial pressures).* Prior to each test, the chamber shall contain the specified gas composition, consisting of a fuel, oxidizer, inert, or mixture of gases within ±0.01 mole fraction of each concentration. The chamber gas shall be dry and the net amount of trace contaminants, including H2O and CO2, shall be less than a mole fraction of 0.01 unless waived by the Project Scientist *for subsequent tests conducted where the ambient gas is scrubbed between tests, rather than discarded and replaced.*[<3,<4]

1.11.2. Prior to each test, the chamber atmosphere shall be well mixed. The chamber contents shall be considered well mixed if they are circulated *(e.g., with the CIR chamber fan)* for a duration that when multiplied with the fan's volumetric flow rate is at least 100 times the chamber's volume.*

1.11.3. Quiescent conditions shall be achieved with a hold period after filling, venting or actuator motion, and prior to ignition. The duration of the hold period shall be at least 300 s and uplinkable *(where the uplink could be to initiate the test rather than the hold duration itself).* During testing, convective disturbances shall be limited to those caused by burner gas flow, combustion, the igniter, and the motion of the mesh electrode (if any) and any diagnostics (e.g., the TFP array). Unless otherwise specified, the quiescent condition shall extend through the entire duration of the data sampling (i.e., beyond the flame duration) as specified in 1.11.[<3]

1.11.4. The capability to vary the initial chamber pressure in the range 0.1 to 3 bar absolute and set it within ±3% of an uplinked value is required.[<3,<4]

1.11.5. The initial ambient temperature shall be 290 to 310 K and uniform within ±5 K (*and can be ensured by minimizing heat sources)* unless waived by the Project Scientist.[<3,<4]

1.11.6. The chamber free volume shall be maximized, with at least 80 liters required. *A large free volume will help ensure constant far field conditions (e.g., temperature, pressure, composition) throughout the duration of each test.*

1.11.7. To the extent practical, the chamber free volume shall be without obstruction (e.g., to flow) and symmetric relative to the chamber axis and the intersection of the CIR chamber window axes, with the exception of a zone (if any) that is as small as possible, encircled by the CIR interface ring, and separated from the burner by an allowed flow obstructing or inhibiting barrier. *The free volume could be made symmetric by distributing components uniformly at similar distances from the burner outlet.*[3,<4]

1.11.8. For the spherical burner tests, a free area of at least 200 mm in diameter and as large as possible and centered on the spherical burner (or the intersection of the CIR chamber window axes) shall be kept clear of solid objects except the burner and tube. The temporary insertion of the igniter and the presence of any probes (including TFP fibers) are allowed exceptions. *The purpose of this free zone is to ensure the symmetry of the velocity, thermal, and composition fields.*[4]

1.11.9. For the gas-jet burner, coflow, and BRE burner tests, a cylindrical free area that is (1) at least 200 mm and as large as possible in diameter, (2) extends at least 100 mm and as far as possible downstream from the burner outlet, and (3) extends at least 50 mm and as far as possible upstream of the burner outlet shall be kept clear of solid objects. A second cylindrical free area (collocated with the first) that is (1) at least 150 mm and as large as possible in diameter and (2) extends at least 200 mm and as far as possible downstream from the burner outlet shall be kept clear of solid objects. The temporary insertion of the igniter and the presence of

any probes (including TFP fibers) are allowed exceptions. The electrode mesh is also an allowed exception for tests utilizing the electric field. *The purpose of this free zone is to ensure the symmetry of the velocity, thermal and composition fields. It is helpful if the zone of exclusion can extend beyond any minimum dimensions even if it doesn't simultaneously meet all minimum dimensions specified. For example, it is helpful to have the free zone extend farther than 200 mm downstream of the burner outlet, even if the diameter is less than 200 mm in that portion. The zone specified here is distinct from the free zone for the electric field which is specified in 1.7.6.*[1,2,5,*]

1.11.10. Ambient disturbances during each test, including the entire data sampling period as specified in 1.12, shall be limited to those caused by burner flow, combustion, the igniter, the motion of any probes or the electrode mesh, and g-jitter. See the acceleration requirements in 1.11.11.[3]

1.11.11. Testing shall not be conducted when thrusters fire or spacecraft dock or undock from ISS. *Based on SPICE results, the normal ISS operations should otherwise provide an adequate acceleration environment, especially given that the CIR is equipped with a Passive Rack Isolation System (PaRIS).*[<3,<4,*]

1.11.12. To the extent possible, there shall be nothing other than the flame that emits within each optical detector's field of view and spectral range of sensitivity. To the extent possible, all imaging and radiant emission measurements (e.g., made by cameras, thermopile detectors, photomultiplier tubes, etc.) shall have a non-reflective background within their spectral range of sensitivity where the emissivity of all hardware within a detector's field of view is at least 0.5 and as large as possible across the detector's spectral range of sensitivity. Allowed exceptions include the lamp(s) when activated, probe tips, TFP fibers, the burner outlet, and the temporary insertion of the igniter. The capability to optionally and internally cover and uncover any and all windows to prevent back reflection (e.g., from the flame) is required, *where it is understood that such window covering could prevent use of all available cameras. Based on testing with samples, the CIR chamber interior should have minimum emissivities of 0.9286 and 0.5628 for wavelength ranges of 0.25-0.7 and 0.7-20 microns, respectively (per verification CIR-VER-3960 and procedures CIR-TPP-3953).*[4,*]

1.12. Data Synchronization and Recording

1.12.1. All collected data and images shall include the collection time using a common reference time, where each measurement shall be synchronized within no more than twice its temporal resolution (i.e., response time).[<2,3]

1.12.2. Unless otherwise noted, all non-imaging measurements shall begin at an uplinked time that is up to 5 minutes prior to ignition and continue to an uplinked time up to 5 minutes after extinction detection. *Pre-ignition and post-extinction durations of 30 seconds each is adequate for the s-Flame experiment.*[3,4]

1.12.3. Unless otherwise noted, all imaging measurements shall begin at an uplinked time

that is up to 1 minute prior to ignition and continue to an uplinked time up to 1 minute after extinction detection. *Post-extinction imaging is important to verify that the flame truly extinguished and didn't merely seem to do so based on the extinction detection.*[3,4,*]

1.12.4. It shall be possible to have uplinked start and stop times that do not match for the non-imaging and imaging measurements *because of the imaging measurements' much greater requirement for memory and thus downlinking time. In this regard, note that it is envisioned that only a fraction of the recorded imaging data may be downlinked for each test. The fraction could be selected after a review of non-imaging data and the operations camera data.*[3,4,*]

1.12.5. With the exception of the ops color imaging, it shall be possible to downlink image data from only selected imaging system(s). *Some exploratory testing will be conducted to identify limit or ideal conditions, where it will not be necessary to download all image data for those exploratory tests.**

1.12.6. For each imaging system other than the ops color imaging, it shall be possible to downlink only a fraction of the acquired image data from selected time period(s), and it shall be possible to select different time period(s) for each of those imaging systems. *Some exploratory testing will be conducted to identify limit or ideal conditions, where it will not be necessary to download all image data all image data for those exploratory tests. Furthermore, even in ideal conditions, it may not be necessary to download all of the image data. For example, it is likely that the temperature field and/or soot volume fraction will only be computed for selected time(s) during a test.**

1.12.7. Unless otherwise noted or waived by the Project Scientist, all of the following measurements shall be simultaneously made and recorded throughout the duration of each test.*

- 1.12.7.1. Chamber pressure (see 2.1)
- 1.12.7.2. Gas flow rates (see 2.3)
- 1.12.7.3. Burner pressure differential (see 2.4) – only required for BRE and spherical flame tests
- 1.12.7.4. Electric potential (see 2.5) – only required for E-FIELD Flames tests
- 1.12.7.5. Acceleration (see 2.6) – whenever SAMS is available
- 1.12.7.6. Color imaging for operations (see 3.1)
- 1.12.7.7. Color imaging for data analysis (see 3.2)
- 1.12.7.8. Ultraviolet (UV) imaging (see 3.3)
- 1.12.7.9. Temperature: burner (see 3.4.1)
- 1.12.7.10. Temperature: hot soot-containing regions (see 3.4.2) **AND/OR** hot soot-free regions (see 3.4.3) - where the latter is not planned for E-FIELD Flames tests if fibers are used for pyrometry
- 1.12.7.11. Temperature: far-field (see 3.4.4) – except for E-FIELD Flames tests (unless the measurement does not interfere with the electric field zone of exclusion)
- 1.12.7.12. Soot volume fraction (see 3.5)
- 1.12.7.13. Radiant emission (see 3.6)

1.12.7.14. Chemiluminescent emission (see 3.7)
1.12.7.15. Ion current (see 3.8) – only required for E-FIELD Flames
1.12.7.16. Heat flux (see 3.10) – only required for BRE burner tests

1.13. BRE Burner (BRE)

The designs of the BRE PI team's ground-based burners can be found in Appendix D of this document.

1.13.1. Each BRE burner shall have a circular gas-permeable outlet surface (e.g., perforated screen and/or mesh) from which the fuel gas is ejected, where the set will at least include burners with an inner diameter of 25 and 50 mm (i.e., of that gas-permeable outlet surface) where each diameter is within ±1 mm and is measured and known within ±0.1 mm. Required burner instrumentation is an allowed exception to the otherwise circular shape of the burner outlet. *A brass perforated screen suggested by the U. Maryland investigators is McMaster-Carr part# 9360T13 which is 0.016" thick and has a staggered pattern of 0.016"diameter hole, with a 0.035" center to center spacing resulting in 22% open area. In U. Maryland prototype burners, the screen was used to encase a 1" thick layer of glass beads, which were 1/8" and 3/16" diameter in the 25-mm and 50-mm burners, respectively. The porous matrix created by the layer of beads was used to create a uniform flow profile.*[5,]*

1.13.2. The planes defined by each burner's outer rim (i.e., the top of the outer rim) and gas-permeable outlet shall be orthogonal to the burner axis and flat to within ±0.1 mm, neglecting the perforations or similar openings in the latter case.*

1.13.3. The top of each burner's outer rim shall be 0.0 to 1.0 mm downstream of the burner's gas-permeable outlet surface.*

1.13.4. At the top of each burner's outer rim, the rim's thickness shall be no more than 2 mm (e.g., such that the outer diameter shall be no more than 4 mm greater than the burner's inner diameter). Within at least 50 mm of the burner rim top, the burner shall protrude radially outward as little as possible and not beyond a conical surface that is 30 degrees from the burner axis and intersects the top of the burner's outer rim, *where a uniform outer surface could be helpful for computational modeling. This requirement is to minimize heat loss to the burner rim and avoid restricting oxygen transport (assuming a normal flame) to the flame base.**

1.13.5. Each BRE burner shall have a uniform flow profile that is axisymmetric, i.e., where the velocity is independent of the angular position, with the exception of the required burner instrumentation. For the BRE burner, axisymmetric flow means that the variation in axial velocity with angular position (e.g., as measured in 1.13.6) shall be less than 10% of the (mean) velocity, where this shall hold for all radial positions from the burner's center to the outer rim. To account for the BRE burner instrumentation, where the center of the off-center heat flux measurement is considered as N (north), then the two axial velocity profiles in each of the three following pairs shall match each other: NE and NW, E and W, and SE and SW. The N and S profiles are not required to match. *For example,*

*the axial velocities measured on the two radii (e.g., NE and NW) shall match within 10% of the (mean) axial velocity at the same radial distance.**

1.13.6. Each BRE burner's flow profile, across a plane orthogonal to the burner axis and within 2 mm downstream of the burner's outlet, shall be well documented. The spatial uniformity shall be verified by 1g measurement of the velocity field using a cold flow (i.e., with no flame) with a nominal axial velocity of 5 cm/s. The axial velocity shall be measured across the burner's diameter for at least four angular positions, namely N-S, NE-SW, E-W, and SE-NW when the center of the off-center heat flux measurement is considered as N (north). The axial velocity shall be measured at 10 or more uniformly spaced positions across each diameter. *Smoke wire imaging with air flowing through the burner is suggested as a way to characterize the burner flow. Another option is hot-wire anemometry.**

1.13.7. For each BRE burner, the flame shall be axisymmetric over the full range of flow conditions. To be axisymmetric, (1) the variation in the vertical distance from the burner outlet to the visible flame edge with radial position shall be less than 10% of the (mean) vertical distance. To account for the BRE burner instrumentation, where the center of the off-center heat flux measurement is considered as N (north), then the two flame shape profiles in each of the three following pairs shall match each other: NE and NW, E and W, and SE and SW. The N and S profiles are not required to match but shall be measured. The axisymmetry of a 60/40 CH4/N2 flame shall be demonstrated in 1g for nominal flow velocities of at least 1, 3, and 5 cm/s. This full set of verifications will be conducted in 1g, while 0g verification – via drop testing – shall include at least a comparison of the E-W pair at the three specified velocities.*

1.13.8. Each BRE burner shall be positioned such that*:

1.13.8.1. burner axis is coincident with the CIR chamber axis within ±2 mm and orthogonal to the CIR chamber window axes,*

1.13.8.2. plane of the CIR chamber window centers is 10±2 mm downstream of (i.e., above) the inner tube outlet.[5,*]

1.13.9. The outlet surface and outer rim of each BRE burner shall be fabricated from brass *to match burners used in ground-based testing (e.g., in regard to heat transfer, catalysis, etc.).**

1.13.10. Within 10 mm of the burner outlet, each burner shall be capable of withstanding temperatures of 0-200 ºC, *where the recommended heat flux transducers have a maximum (body) temperature of 200 ºC.* [5,*]

1.13.11. See 1.5 for the electrical requirements for each burner.[>2,*]

1.13.12. See 3.4.1 and 3.10, respectively, for the surface temperature and heat flux measurement requirements for each BRE burner.[5]

2. Monitoring Measurements Requirements

This section describes needed measurements of the initial, boundary, and similar experiment conditions, e.g., to enable modeling of the experiment and analysis of the results.

2.1. Chamber Pressure

It is expected that this measurement will be satisfied by the pressure transducer(s) with which the CIR chamber is already equipped.

2.1.1. The absolute chamber pressure shall be measured with an accuracy of ±1% of reading. [3,4]

2.1.2. The pressure measurement range shall be 0.1 to 4 bar absolute. [<3,<4]

2.1.3. The chamber pressure shall be measured at 1 sample/s or faster with a temporal resolution (i.e., response time) of 0.5 s or less. [3,<4]

2.2. Chamber Oxygen Concentration

This requirement will be met by the CIR's Gas Chromatograph Instrumentation Package (GCIP), if and when it is launched and functional.

2.2.1. Unless waived by the Project Scientist, the CIR's GCIP shall be used when available to measure the oxygen concentration of the combustion chamber atmosphere prior to each test. The measurements shall be made after (1) the atmosphere has been completely prepared for the test, e.g., after any filling and/or scrubbing procedures, and (2) the chamber contents have been well mixed. [<3,<4,*]

2.3. Gas Flow Rates

As suggested in 1.8, the measurement could be made using an exchangeable set of mass flow controllers, where a good candidate may be the Hastings HFC-D-302 because of its auto-zero function, high accuracy, and fast response time.

2.3.1. It is required that each gas flow rate shall be measured with an accuracy of ±5% of the reading or better, where the uncertainty is as small as possible. *As an example, if a flow meter has a full scale uncertainty of ±1%, then its use should be limited to flows that are no less than 20% of its maximum. Compare with requirement 1.9.4 for flow control. The suggested Hastings HFC-D-302 has an uncertainty of only ±(0.2% full scale + 0.5% of the reading).* [3,4]

2.3.2. The gas flow rate ranges are specified in section 1.9 and specific flow rates are presented in the experiments' test matrices, which are found in section 5.*

2.3.3. Each measurement shall be made at 10 samples/s or faster with a temporal resolution (i.e., response time) of no more than 1 s and as short as possible. *While some commercial mass flow controllers and meters have response times of a second or more, other commercial units (e.g., manufactured by Hastings and Sierra) have response times that are on the order of 100 ms. However, the suggested Hastings HFC-D-302 has a settling time of 0.5 s.* [<3]

2.3.4. The gas flow in all supply lines to both the CIR chamber and ACME burner shall always be measured and recorded during each test even if and when there is no gas flow in certain line(s).*

2.4. Burner Pressure Differential (for BRE and spherical burner tests)

It is suggested that the spherical burners could attach to the ACME insert via a quick connect to a common inlet plenum equipped with a differential pressure transducer. Although such measurements are not important for tests with the gas-jet burners, it is suggested that they could connect in the same way to the plenum.

2.4.1. The pressure differential across the BRE and spherical burners (i.e., between the supply tube inlet and the chamber) shall be measured with a required accuracy of ±2% of the reading and as small as possible. The pressure differential shall be measured downstream of any valves so that it indicates the burner's pressure regardless of valve activation.[3,4,*]

2.4.2. The measurement range shall be from 0.1 to roughly 1.5 times the pressure drop across the spherical burners at a flow rate of 5 slpm (on a N2 basis) in cold flow testing (i.e., with no flame). *The pressure drop and thus flow measurement range will depend on the spherical burner design and fabrication.*[3,4,*]

2.4.3. The measurements shall be made at a frequency of 10 samples/s or faster with a temporal resolution (i.e., response time) of 0.5 s or less and as small as possible.[3,4,*]

2.5. Electric Potential (E-FIELD Flames)

It is suggested that a ground calibration could be enabled with use of a calibrated voltage divider.

2.5.1. The electric potential between the mesh electrode and the high voltage (HV) ground terminal shall be measured to within the larger of 20 V or ±1% of the reading, where this may not be accomplished indirectly through (1) measurement of a control voltage for the high voltage and/or (2) a preflight ground calibration of the high voltage (i.e., electric field potential) as a function of the control voltage. In other words, the measurement shall be of the actual electric potential.[2,*]

2.5.2. The measurement range shall be at least as much as the maximum range, including both polarities, of the electric field as specified in section 1.7.[2]

2.5.3. Measurements shall be made at a rate of at least 120 sample/s with a temporal resolution (i.e., response time) of 1 ms or less.[2]

2.5.4. Measurement of the electric potential is only required for the E-FIELD Flames tests.*

2.6. Acceleration

This requirement will be met with SAMS which is already in the U.S. laboratory module in the ISS. It is not expected that there will be any CIR or ACME instrumentation for this purpose.

2.6.1. Unless waived by the Project Scientist, the acceleration environment shall be measured by SAMS when possible, with a sensor head at or near the CIR, when ACME tests are being conducted.*

3. Science Diagnostics Requirements

This section describes imaging and other measurements of the flame and flame effects. The corresponding Science Data End Products (SDEPs) are listed for the five ACME experiments.

3.1. Color Imaging for Operations (i.e., "ops")

Imaging is required to enable near real-time review of tests to allow for planning of subsequent tests. This is especially important when a sequence of tests is conducted near a limit (e.g., sooting, stability) where that limit is not known in advance for long-duration microgravity conditions. This operational imaging must be in color in order to distinguish the presence or absence of soot. This requirement could potentially be met with the same color imaging system(s) specified in section 3.2.

3.1.1. The ops imaging shall have a wavelength response of 400 to 700 nm nominally matching human vision.[3,4]

3.1.2. The ops imaging shall be focused on the CIR chamber axis, where the Field of View (FOV) plane includes the CIR chamber axis.*

3.1.3. The FOV shall include at least a 90-mm diameter circle centered on the intersection of the CIR window axes. *However, the FOV does not need to be centered on the intersection of the CIR window axes.*[<3,<4]

3.1.4. The ability to adjust settings of this imaging system between tests, via uplink control prior to ignition, is required. The adjustable settings shall include at least the gain (or iris). *Gain or iris control is important because of the broad range in the flame intensities and the need to identify the soot inception limit in order to decide on the need to downlink image data and plan for subsequent tests.*[1,3]

3.1.5. The ops imaging system shall provide images at 25 frames per second (fps) or faster.[<3,<4,*]

3.1.6. Near-real time downlink of this color imaging is required *to allow for planning for subsequent tests when the conditions are not known a priori, e.g., for testing close to a soot or stability limit*.[1,3]

3.1.7. The ops imaging system shall be an ORU *because it will be susceptible to radiation damage*.*

3.1.8. Lamp(s) shall be available for optionally illuminating the imaging views before, during, or after tests. Lamp control shall be accomplished via uplink prior to ignition.[3]

3.2. Color Imaging for Data Analysis ("data")

SDEPs: 1A1,4-6; 1B1,4-7; 2A2,5,8; 2C2,4; 2D2,4; 3A1,3-4; 3B1,3,5-7; 3C1,3-5; 4A1-2,4; 4B1-2,4; 4C2,4-5**;** 5A1,5; 5B1,5; 5D1 (where 5C is a deleted objective)
It is expected that the color imaging requirements will be met with a new camera developed by and for ACME. After ACME, the camera would become a CIR asset and available for subsequent CIR experiments.

3.2.1. The data color imaging shall have a wavelength response of 400 to 700 nm nominally matching human vision.[3,4]

3.2.2. The data color imaging shall be at least as sensitive (especially to dim blue light at 431 nm) as cameras with equipped with a Sony ICX285 2/3" Progressive scan CCD.*

3.2.3. The lens for each data color imaging system shall have an f-number of no more than 2.8 and as small as possible.*

3.2.4. The data color imaging shall simultaneously be capable of imaging at its maximum framing rate with a full sensor, i.e., no binning or limited Region Of Interest (ROI) with:

3.2.4.1. spatial resolution at the focal plane of 0.2% or less of the corresponding Field Of View (FOV) dimension,[<1,<3,*]

3.2.4.2. bit depth of at least 3x12 (i.e., 12 bits each for red, green, and blue) when imaging the full sensor at the maximum framing rate.[1, 3,*]

3.2.5. Each data color imaging system shall be focused on the CIR chamber axis.*

3.2.6. The Field of View (FOV) for each data color imaging system shall be centered on the intersection of the CIR window axes (*e.g., on the spherical burner*), where the FOV plane is coincident with (e.g., not orthogonal to) the CIR chamber axis.*

3.2.7. For the **spherical and BRE flames**, it shall be possible to have a FOV of at least 90 mm in diameter and larger if possible.[3-5]

3.2.8. For the **gas-jet and coflow flames**, it shall be possible to have a FOV of 35 mm along the chamber axis and at least 20 mm wide (i.e., in the direction orthogonal to the CIR chamber axis).[>1,>2,*]

3.2.9. If the FOV is rectangular, then the long dimension shall be aligned with the CIR chamber axis. *This orientation will best match the gas-jet flames which tend to be tall and narrow.**

3.2.10. At least one view is required. *Having two views would allow for confirmation that flames are axisymmetric. Two views could be set differently, where one camera could image the dim blue of the flame (while saturating in the hot soot region), where the second camera could be set to image the hot soot region without saturation, making it useful for soot pyrometry.*[3,4,*]

3.2.11. The ability to image both with and without an optical filter is required. The spectral transmission of any filters shall be well characterized for the spectral range of the imaging system (specified in 3.2.1). The set of available filter(s) shall include at least a filter with a transmittance from 400-700 nm matching within ±5% of a 1-mm thick BG7 Schott glass filter obtained from Melles Griot

(*e.g., see* http://www.optical-filters.com/bg7.html) *to reduce the blackbody soot emission (e.g., red) relative to the chemiluminescent emission (e.g., blue) to avoid saturation while maintaining sensitivity to the much dimmer chemiluminescent emission*, and 430-nm *(for imaging CH*)* and 450-nm bandpass filters (*for post-test subtracting of soot emission from CH* imaging)*, where the transmission curves for each bandpass filter shall match within ±5% of Thorlab transmittance data, e.g., from http://www.thorlabs.com/newgrouppage9.cfm?objectgroup_id=1001, for a 10-nm (nominal) FWHM (i.e., Full Width at Half Maximum transmission). Assuming a filter barrel with four filter positions consecutively numbered 0-3 (in the direction of rotation, if both directions are not possible) and a home position of 0, the positions from 0-3 shall respectively be 'no filter', BG7 filter, 430-nm filter, and 450-nm filter, *where one objective of this configuration is to minimize the times to swap between (1) 'no filter' and BG7 filter and (2) 430-nm filter and 450-nm filter, e.g., to minimize lost time in CH* imaging (where 450-nm imaging is subtracted from 430-nm imaging).*[1,*]

3.2.12. When imaging the full sensor (i.e., with no binning or limited ROI) at a bit depth of at least 3x12, at least one imaging system shall capture images at 20 frames per second (fps) or faster. *If there is a second imaging system, it can and perhaps should be slower. For example, 10 fps, is an acceptable rate for the CLD Flame experiment.*[<3,<4,*]

3.2.13. The ability to adjust settings of each imaging system between tests, via uplink control prior to ignition, is required. The adjustable settings shall include at least the bit depth, gain, iris, exposure time, framing rate, binning, and Region Of Interest (ROI).*[,4]

3.2.14. Each data color imaging system shall be well characterized, and the characterization plan shall be pre-approved by the Project Scientist(s). The characterization shall include but not be limited to the spatial uniformity (i.e., across the detector), temporal stability, sensitivity linearity, Field of View (FOV), resolution, depth of field, and spectral response. Blackbody characterization of each imaging system is required with and without the BG7 filter(s) at temperatures from at least 800°C to 1200°C and increments of no more than 50°C, *e.g., to enable quantitative temperature measurements via pyrometry*. If fibers are used for hot soot-free temperature measurement (see section 3.4.3), then 1g characterization is also required with the fibers. Characterization shall be conducted with applicable optics installed, e.g., with characterization for each combination of camera, lens, and filter (if any).*

3.2.15. The data color imaging system(s) shall be ORU(s).*

3.3. Ultraviolet (UV) Imaging

SDEPs: 1A2-6; 1B2-5; 2A2,5,8; 2D2,4; 3A3; 3B3,6-7; 3C3-5; 4A1-2; 4B1-3; 4C2,4**;** 5A2,5; 5B2,5; 5D1 (where 5C is a deleted objective)

It is expected that the requirements for UV imaging will be met with the CIR's LLL-UV camera which is already equipped with an OH filter. However, more than one lens is required because of the disparity in FOVs for the different ACME experiments.*

3.3.1. These imaging requirements are generally similar to the ops color imaging requirements (3.1) except that the camera and all associated optics shall be optimized for UV imaging through an OH* filter (310 nm) with a 10 nm FWHM, i.e., Full Width at Half Maximum transmission.[3,4]

3.3.2. For the **spherical and BRE flames**, that FOV shall be at least 75 mm in diameter.[5,*]

3.3.3. For the **gas-jet and coflow flames**, the FOV shall be 60±5 mm along the chamber axis and at least 30 mm wide (i.e., in the direction orthogonal to the CIR chamber axis).[>1,>2,*]

3.4. Temperature

3.4.1. <u>Burner</u>

SDEPs: 5A3; 5B3

It is suggested that this measurement can be met with the inclusion of a thermocouple(s) on the burners. Temperature measurement is <u>not</u> wanted for the coflow burner because of concerns that it may lead to unwanted asymmetries in the flow field and flame, which is why 3.4.1.3 and 1.4.17 have been deleted.

3.4.1.1. The **spherical burner** surface temperature shall be measured at a location between 20° and 90° of the burner tube. If the measurement is made with a probe, then the probe shall not be visible during testing in at least one view of the color imaging for data analysis. If a probe is used, then 2.2 Second Drop Tower testing shall be conducted with conditions approved by the Project Scientist to verify that the probe doesn't affect the visible symmetry of the flame (e.g., quantified in 1.2.3). *The latter verification can be conducted simultaneously with the verification of the flame symmetry (see 1.2.3).*[3,4]

3.4.1.2. The **gas-jet burner** surface temperature shall be measured on the exterior surface of the burner as close as possible to its outlet (tip) where the measurement (e.g., probe) does not disturb the axisymmetry of the flame. The flame axisymmetry is defined in 1.4.12 and shall be verified as specified there with the important exception that there is no coflow. *Note that this verification does not need to be conducted without the temperature sensor. In other words, once is enough.*[2]

~~3.4.1.3. The **coflow burner** surface temperature shall be measured on the exterior surface of the inner tube as close as possible to the burner outlet where the measurement (e.g., probe) does not disturb the axisymmetry of the flow and flame. The axisymmetry requirements and verification methods are specified in 1.4.9, 1.4.11, and 1.4.12. *Note that these verifications do not need to be conducted without the temperature sensor. In other words, once is enough.*[1,2]~~

3.4.1.4. If the measurement involves a probe, the probes for the **gas-jet and spherical burners** shall each be smaller than 250 microns and as small as possible. *For the gas-jet burners, it is suggested that this can be accomplished by using very fine cement-on surface thermocouples, such as the Omega CO2-K thermocouple.*[3]

3.4.1.5. The measurements shall have a precision of ±2 °C and an accuracy of ± 5 °C.[3,>4]

3.4.1.6. For the **gas-jet burner**, the measurement range shall be at least 0 to 300 °C.[>1,*]

3.4.1.7. For the **spherical burner**, it is required that the measurement range be at least 0 to 700 °C. *For the s-Flame experiment, 400 °C is an appropriate maximum, e.g., based on the adiabatic flame temperature.*[3,>4,*]

3.4.1.8. The measurements shall be made at 10 sample/s or faster with a temporal resolution (i.e., response time) of 0.5 s or less.[3,<4,>5,*]

3.4.1.9. At least four temperature measurements shall be made at the outlet surface of each **BRE burner** including one in each heat flux sensor (discussed in 3.10) and at least two additional locations, where the latter measurements shall be located opposite to the off-center heat flux measurement. Where the center of the off-center heat flux measurement is considered as north (N), there shall be surface temperature measurements in the south (S) at radial positions (i.e., from the burner axis) of at least 5±0.5 mm and 10±0.5 mm for the 25-mm burner and at least 5±0.5 mm and 15±0.5 mm for the 50-mm burner. *Medtherm heat flux transducers can be purchased with integrated surface thermocouples. Sheathed thermocouples, e.g., from Omega, are recommended for the additional locations.*[>5,*]

3.4.1.10. If a **BRE burner** surface temperature measurement that is not integrated with a heat flux sensor involves a probe (see 3.10), the probe shall be no more than 0.3 mm in diameter and as small as possible. *To further ensure an appropriately fast response time*, such probes shall be in good thermal contact *(e.g., via appropriate bonding*) with the burner's metal surface (*e.g., perforated screen*). *Sheathed thermocouples with a 0.010-inch diameter, e.g., from Omega, are recommended.*[5,*]

3.4.1.11. For the **BRE burners**, the measurement range shall be at least 0 to 500 °C. *Type K thermocouples are appropriate for this purpose.*[>5,*]

3.4.2. <u>Hot Soot-Containing Regions</u>

SDEPs: 1A7-8; 1B8-10; 3A2-3; 3B2-3,5,7; 3C2-3,5; 4A3-4; 4B1-4; 4C2,4-5**;** 5A7; 5B7

It is suggested that these temperatures be measured with multi-line emission using a HiBMs camera equipped with the Liquid Crystal Tunable Filter (LCTF), followed by deconvolution, as planned for FLEX-2. Another option is to use unsaturated color imaging and ratio the red and blue signals (for example),

following a procedure used by Marshall Long. Other methods that meet the requirements also are acceptable.

3.4.2.1. Measured data shall be provided for the determination of temperature field in the hot soot-containing region.[3]

3.4.2.2. For the **spherical and BRE flames**, the minimum measurement region shall be a 85-mm diameter centered on the intersection of the CIR chamber window axes.[3-5]

3.4.2.3. For the **gas-jet and coflow flames**, it shall be possible to have a measurement region that is 50±5 mm along the chamber axis and at least 20 mm wide (i.e., in the direction orthogonal to the CIR chamber axis), centered on the intersection of the CIR chamber window axes.[>1,>2,*]

3.4.2.4. Any new measurement system shall be well characterized, and the characterization plan shall be pre-approved by the Project Scientist(s).*

3.4.2.5. The sensor shall allow variable gain via uplink prior to ignition.[3]

3.4.2.6. The measurements shall occur at least every 5 s with a temporal resolution (i.e., response time) of 5 s.[3]

3.4.2.7. The measurements shall start and stop according to uplink prior to ignition. *Not all of the data will be downlinked*.[3]

3.4.3. <u>Hot Soot-Free Regions</u>

SDEPs: 1A7-8; 1B8; 3A2-3; 3B2-3,5,7; 3C2-3,5; 4A3-4; 4B1-4; 4C2,4-5**;** 5A7; 5B7

Temperatures can be measured using multi-line Thin Filament Pyrometry (TFP) using the HiBMs camera or with unsaturated color imaging and ratio the red and blue signals (for example), following a procedure used by Marshall Long. Other methods that meet the requirements also are acceptable.

3.4.3.1. Measured data shall be provided for the determination of temperature distributions orthogonal to the chamber axis, but in a plane including the axis, in the hot soot-free region.[3]

3.4.3.2. Simultaneous measurement shall be made on 5 or more lines spaced 5± 0.5 mm apart from neighboring lines.*[,>3]

3.4.3.3. The ability to reposition the measurement line(s) (*e.g.*, *fibers*) between and during tests to uplinked positions is required *where the latter would allow for measurement at a continuum of axial positions*. A measurement line's axial position (along its length) relative to the burner shall be known as a function of time within ±1 mm when and where it is hot enough to glow visibly.[1,3,*]

3.4.3.4. If fibers are used, they shall be retractable with minimal disturbance to beyond 100 mm from the burner. Partial retraction for the purpose of soot burn-off is required (to be commanded by uplink prior to ignition). The

fibers shall also be fully removable for replacement and so that they don't interfere with the E-FIELD Flames tests.[3]

3.4.3.5. For the **spherical and BRE flames**, the minimum measurement region shall be a 85-mm diameter centered on the intersection of the CIR chamber window axes.[4,5]

3.4.3.6. For the **gas-jet and coflow flames**, it shall be possible to have a measurement region that is 50±5 mm along the chamber axis and at least 20 mm wide (i.e., in the direction orthogonal to the CIR chamber axis), centered on the intersection of the CIR chamber window axes.[1]

3.4.3.7. Any new measurement system shall be well characterized, and the characterization plan shall be pre-approved by the Project Scientist(s).*

3.4.3.8. If the measurement is made by TFP, then the fiber(s) shall be 15-micron oxidized SiC fibers.[3]

3.4.3.9. If the measurement is made by TFP, the fiber(s) shall be intersect and be orthogonal to the CIR chamber axis. They shall be within 25° and as close as possible to orthogonal of a corresponding imaging system's line of sight.*

3.4.3.10. The sensor shall allow variable gain via uplink prior to ignition.[3]

3.4.3.11. The measurements shall occur at least every 5 s with a temporal resolution (i.e., response time) of 5 s.[3,<4]

3.4.3.12. The measurements shall start and stop according to uplink prior to ignition. *Not all of the data will be downlinked.*[3]

3.4.3.13. If fibers are used, they shall be mounted within ORU(s) and removable from the ACME CIA during spaceflight, *e.g., for replacement due to degradation or other damage*.*

3.4.3.14. If the measurement is made by TFP, then there shall be the option of using either the SiC fibers described in 3.4.3.8, etc. or an alternate set where the furthest downstream (i.e., top) fiber is replaced with a platinum wire that is 200±50 microns in diameter where that wire diameter is known to ±5 microns.[3,*]

3.4.3.15. If the measurement is made by TFP, then the incandescence shall be characterized in normal gravity (1g) with the color "data" imaging system specified in 3.2, equipped with the BG7 filter, and any other imaging systems that may be used to accomplish the flame temperature measurements described in 3.3 and 3.4. This characterization shall be carried out with the flight (*preferred*) or flight-like imaging system hardware including all optical components, e.g., windows, filters, etc. in their flight spacing and configuration, i.e., matching the flight hardware in all appropriate ways as closely as possible. The characterization of each system shall be conducted under conditions where the measurement does

not saturate in any of the three channels, i.e., red, green, and blue and where it uses 75-90% of the dynamic range for at least one channel. *Ideally, this characterization would be conducted in the CIR Ground Interface Unit (GIU), where it is possible to use a coflow to stabilize and minimize the buoyant bending horizontal flames if testing must be conducted with the CIR in its normal configuration.*[3,*]

3.4.3.15.1. The 1g characterization of each system shall be conducted with a type-S thermocouple oriented as specified in 3.4.3.1 and of the same dimension as the wire specified in 3.4.3.14 with a cylindrical, i.e., butt, welded junction (*e.g., fabricated as described at* http://www.youtube.com/watch?v=HUriLTnkCQw). *Butt-welded thermocouple junctions are also commercially available, e.g. from Omega; see http://www.omega.com/Temperature/pdf/IRCO-BW.pdf.* The characterization of each system shall be conducted with the thermocouple at 4 or more uniformly-spaced temperatures over a range of at least 1000-1600 K and at 4 or more uniformly-spaced temperatures over a range of at least 1600-1750 K (i.e., at a minimum 1000, 1200, 1400, 1600, 1650, 1700, 1750 K). *It is strongly recommended that the range of temperatures be achieved by varying the vertical position of the thermocouple above a soot-free (e.g., blue-only) flame.* The temperature measurement for each characterization shall be stable within ±10 K for at least 10 minutes, where the thermocouple voltage shall be measured with a resolution of at least 0.001 mV. For each characterization, there shall be no interference from visibly emitting or reflecting elements, including a flame. If the thermocouple is heated by a flame, then the thermocouple shall be downstream (i.e., above) of the visible (i.e., luminous) flame. *A measurement downstream of the luminous region is important to ensure that there is no optical interference, i.e., flame emission in addition to the broadband thermal emission of the thermocouple.* [3,*]

3.4.3.15.2. The 1g characterization of each system shall also be conducted with a flight-like platinum wire, i.e., matching the flight wire specified in 3.4.3.14 as closely as possible, at the same temperature conditions (*e.g., positions above the flame*) as in the thermocouple characterization specified in 3.4.3.15.1. *For each temperature, it is recommended that the thermocouple be characterized, then promptly removed and replaced by the platinum wire in the same position, and then promptly removed and replaced by the SiC fiber in the same position (see 3.4.3.15.3) so that all three characterizations are at the same temperature condition. It is suggested that this might be accomplished by mounting the thermocouple, wire, and fiber in a rotisserie-like fixture which could be rotated to place the desired element in the most downstream, i.e., lowest, position for the*

characterization. Such a fixture might incorporate one or more extra SiC fibers for redundancy to reduce lost time if a fiber breaks. [3,*]

3.4.3.15.3. The 1g characterization of each system shall also be conducted with a flight-like 15-micron oxidized SiC fiber, i.e., matching the flight fibers closely as possible, at the same temperature conditions (*e.g., positions above the flame*) as in the thermocouple characterization specified in 3.4.3.15.1. *For each temperature, it is recommended that the thermocouple be characterized, then promptly removed and replaced by the platinum wire in the same position (see 3.4.3.15.2), and then promptly removed and replaced by the SiC fiber in the same positions so that all three characterizations are at the same temperature condition. It is suggested that this might be accomplished by mounting the thermocouple, wire, and fiber in a rotisserie-like fixture which could be rotated to place the desired element in the most downstream, i.e., lowest, position for the characterization. Such a fixture might incorporate one or more extra SiC fibers for redundancy to reduce lost time if a fiber breaks.* [3,*]

3.4.4. <u>Far-Field</u>

SDEPs: 3A2; 3B2; 3C2; 4A3; 4B2,4; 4C2

It is suggested that these temperatures will be measured with fine wire, exposed junction thermocouples. It is suggested that there be two or more separate thermocouple rakes which can be exchanged, where high temperatures are measured with type B thermocouples and others are measured with type K thermocouples. Other methods that meet the requirements are also acceptable.

3.4.4.1. Far-field temperatures shall be measured.[3,4]

3.4.4.2. All measurements be made along unobstructed lines passing through the intersection of the CIR chamber window axes and shall avoid the region within 20 degrees of the burner supply tube.[<3]

3.4.4.3. For tests requiring close measurements, the radial measurement positions shall include at least the following, as measured from the intersection of the CIR chamber window axes[3]:

3.4.4.3.1. 13 mm [3]
3.4.4.3.2. 25 mm [3]
3.4.4.3.3. 50 mm [3]
3.4.4.3.4. 100 mm [3]
3.4.4.3.5. 200 mm [3,4]
3.4.4.3.6. 200 mm in a direction orthogonal to the other 200-mm position (when the intersection of the CIR window axes is considered the origin of the two rays)[4]

3.4.4.4. For tests requiring distant measurements, where no probes shall be within 40 mm, the radial measurement positions shall include at least the following, as measured from the intersection of the CIR chamber window axes[4]:

3.4.4.4.1. 45 mm [4]
3.4.4.4.2. 60 mm [4]
3.4.4.4.3. 100 mm [4]
3.4.4.4.4. 100 mm in a direction orthogonal to the other 100-mm position (when the intersection of the CIR window axes is considered the origin of the two rays)[4]
3.4.4.4.5. 200 mm [4]
3.4.4.4.6. 200 mm in a direction orthogonal to the other 200-mm position (when the intersection of the CIR window axes is considered the origin of the two rays)[4]

3.4.4.5. The positions of each measurement shall be known in three dimensions to within ±3 mm and as accurately as possible.*

3.4.4.6. The measurement range shall be at least 700-1700 °C for positions within 40 mm of the intersection of the CIR chamber window axes, and at least 0-1250 °C for the remaining positions. *For the inner positions (i.e., within 40 mm), it is acceptable to connect type B thermocouples to type K leads, where the effect of the additional low-temperature junctions can be accounted for by collection of thermocouple data before ignition and after extinction.*[<3]

3.4.4.7. Neglecting thermal radiation, catalytic, conduction, and other secondary effects associated with the measurement, the sensor's precision (e.g., based on the voltage measurement) shall be ±3 °C for positions within 40 mm of the intersection of the CIR chamber window axes, and ±1 °C for the remaining positions.[<3, <4]

3.4.4.8. The measurements shall be made at 10 samples/s or faster with a response time (i.e., time constant) of no more than 0.1 s and as small as possible in air at 1 bar flowing at no more than 20 m/s. *This can be accomplished by using fine wire, exposed junction thermocouples (ideally butt welded) with wire diameters that are as small as possible (e.g., 0.005 inch diameter) given other constraints. The fine wires should extend for at least 100 diameters in length from the junctions to minimize conductive heat transport.*[3,*]

3.4.4.9. There shall be a cylindrical zone of exclusion that has a diameter of 50-mm or greater and is as large as possible extending from the intersection of the CIR chamber window axes to 10 mm beyond each temperature measurement position. No hardware that is more than 5 mm across, including the CIR chamber wall, shall be within each zone during testing other than other temperature sensors, the electrode mesh (if used), any fiber array for soot-free temperature measurement, and the temporary insertion of the igniter.*

3.4.4.10. If thermocouples are used, each probe (including the junction) shall be within 10° of parallel to a ray from the intersection of the CIR chamber

window axes to the temperature measurement position to a distance of at least 100 mm from the intersection of the CIR chamber window axes.[3]

3.4.4.11. If thermocouples are used, each probe within a radial distance of 100 mm shall have an outer (e.g., sheath) diameter that is no greater than the following and as small as possible*:

3.4.4.11.1. 0.2 mm within 5 mm of the measurement position (where this can be the wire diameter if the thermocouple is exposed)*

3.4.4.11.2. 2 mm within 20 mm of the measurement position (where this can be the wire diameter if the thermocouple is exposed)*

3.4.4.11.3. 3.5 mm within 50 mm of the measurement position*

3.4.4.12. The far-field temperature sensors within 100 mm (of the intersection of the CIR chamber window axes) shall be ORU(s) and removable from the ACME CIA during spaceflight *allowing for exchange or simply removal*.*

3.4.4.13. Far-field temperature measurements are not required for the E-FIELD Flames experiment.*

3.5. Soot Volume Fraction

SDEPs: 1B6-7,11-12; 2C1-4; 3A4; 3B4-5; 4A4; 4B2,4; 4C2,5**;** 5A8; 5B8

This can be measured by laser extinction using the HiBMs laser diode illumination package and the HiBMs camera followed by deconvolution. Other methods that meet the requirements also are acceptable.

3.5.1. The soot volume fraction within the flame shall be measured.[3]

3.5.2. For the **spherical and BRE flames**, the measurement region shall be at least 45 mm in diameter, centered on the intersection of the CIR chamber window axes.[>1,>2,5,*]

3.5.3. For the **gas-jet and coflow flames**, the measurement region shall be at least 25 mm along the chamber axis and at least 25 mm wide (i.e., in the direction orthogonal to the CIR chamber axis), centered on the intersection of the CIR chamber window axes.[1]

3.5.4. Three image types are required: illumination with no flame, illumination with the flame, and the flame without illumination – but each image type is not required during the same test.[3]

3.5.5. The measurements shall be made at 1 sample/s or faster with a temporal resolution (i.e., response time) of 1 s.[3]

3.5.6. The measurements shall start and stop according to uplink prior to ignition. *Not all of the data will be downlinked.*[3]

3.6. Radiant Emission

SDEPs: 4B4; 4C2-4**;** 5A4-5,9, 5B4-5,9

It is suggested that the broadband measurements be made using thermopile detectors, e.g., as produced by Dexter Research. Other approaches that meet the requirements are acceptable.

3.6.1. Flame radiant emissions shall be measured such that the accuracy of the flux measurement is within ±10%.[4]

3.6.2. The minimum region for each wide-angle measurement shall be a cone which is at least 120 mm in diameter at the intersection of the CIR chamber window axes. The measurement region for the narrow-angle (i.e., spot) measurements discussed in 3.6.3 shall also be conical but much smaller than 120 mm in diameter at the chamber axis.[>3,*]

3.6.3. A linear array of five or more measurements shall be made where the view from each detector is equidistant from and orthogonal to the CIR chamber axis within ±3 degrees. One wide-angle measurement region (i.e., FOV) shall be centered on the intersection of the CIR chamber window axes and the others shall be narrow-angled (i.e., spot) and positioned uniformly, with equal spacing of no more than 30±1 mm, across a span of at least 60±1 mm in each direction (i.e., above and below) along the CIR chamber axis.[>3,*]

3.6.4. One or more additional wide-angle measurement(s) shall also be made at angles other than orthogonal to the CIR chamber axis for a measurement region centered on the intersection of the CIR chamber window axes within ±3 degrees. The measurements shall be uniformly spaced in angle relative to the orthogonal direction, and shall cover a span from orthogonal to at least 60±2 degrees above, i.e., downstream, of the burners.[>3,*]

3.6.5. The detector shall have a spectral range of 0.2-11 microns (to include CO2 and OH* emission) and an irradiance range of 0.0001-0.1 W/cm^2. *Sensors equipped with BaF2 windows are suggested. Note that KBr windows are not recommended because moisture can degrade the material.*[<3,<4]

3.6.6. Saturation of the measurement shall be avoided as verified in ground-based testing that is pre-approved by the Project Scientist(s). *Neutral density filters can be useful for this purpose. Also, note that drop testing may be required because the emission from 0g flames can be significantly less than from 1g flames.**

3.6.7. The radiant emission shall be measured at 60 samples/s or faster with a response time of 0.05 s or faster.[4,*]

3.6.8. For tests with the **BRE burner**, the linear array of measurements specified in 3.6.3 is not required. Instead, there shall be at least one wide-angle measurement (*as described in requirement 3.6.2*) just downstream of (i.e., above) the burner, where aperture(s) shall prevent the burner from being visible, i.e., exclude it from the sensor FOV, for which asymmetry in the measurement region is acceptable. In addition, there shall also be at least two narrow-angle (i.e., spot) measurements, where each detector is equidistant from and orthogonal to the CIR chamber axis within ±3 degrees (*as in requirement 3.6.3*). These narrow-angle measurements shall be positioned downstream of (i.e., above) the intersection of the CIR window axes matching the locations specified in requirement 3.6.3. *Simply put, the primary objective of this requirement is for wide-angle sensor(s) to see the flame, but not the BRE burner. To this end, it is suggested that the linear array of*

radiant emission sensors specified in 3.6.3 be removable and exchangeable by the crew, i.e., that it be an ORU. In this way, an alternate linear array of radiometers could be installed for BRE to fulfill 3.6.8. Possible approaches to exclude the burner from the sensor FOV include (1) using an asymmetric aperture (e.g., straight edge) to truncate the otherwise conical FOV and/or (2) tilting the sensor downstream (i.e., up) and away from the burner. These suggestions are further explained (and depicted) in Appendix E and offered to address the issue that each sensor has a finite detection surface such that an aperture alone doesn't define the FOV, but where the FOV is also based on the size of the detection surface (i.e., the position of its edges). As such, there is portion of the FOV that is only visible to some of the detection surface where that portion could be reduced by increasing the distance between the sensor and the aperture. Another possibility is to reduce the size of the detection surface, but that has the negative effect of reducing the sensitivity of the sensor. [>5,*]

3.6.9. For each radiant emission sensor, the FOV and sensor response as a function of position shall be characterized in testing that is pre-approved by the Project Scientist(s). Each FOV shall be measured along at least (1) the chamber axis and (2) along a line that both intersects and is perpendicular to (a) the chamber axis and (b) a ray perpendicular to the sensor center. For the wide-angle BRE sensor(s) specified in 3.6.8, the FOV and sensor response as a function of position shall furthermore be characterized on at least four additional lines in the plane of lines (1) and (2) from the preceding sentence and parallel with lines (1) and/or (2). *The additional characterization is specified for the wide-angle BRE sensor(s) because of their anticipated asymmetry.**

3.7. Chemiluminescent Emission

SDEPs: 1A6; 2A5,7; 2B2-5; 2D1,3; 3C4-5; 4B1; 4C1,3-4**;** 5A5,10; 5B5,10, 5D1

Flame extinction limits will be determined by a combination of two diagnostics: photomultiplier tube measurements and color imaging (see 3.1). It is envisioned that the requirements could be met with a set of three Hamamatsu H5784-03 photomultiplier tube (i.e., photosensor) modules. Other instruments or methods that meet the requirements, such as with a monochromator, are also acceptable.

3.7.1. Flame extinction shall be automatically detected *and will typically trigger a step in the operational sequence.*[2,3]

3.7.2. Simultaneous measurement shall be made of each of the following spectra *where the only difference between the three instruments should be the addition of a filter in the first two cases*.

3.7.2.1. OH* chemiluminescence at 310 nm with a 10 nm or larger FWHM [3,*]

3.7.2.2. CH* chemiluminescence at 431 nm with a 10 nm or larger FWHM [3,*]

3.7.2.3. broadband emission from 300 (or less) to about 600 nm [3,4]

3.7.3. The minimum region for each measurement shall be a 120-mm diameter sphere (when it is assumed that the flame and burner are optically thin), centered on the intersection of the CIR chamber window axes.[3,4]

3.7.4. The system shall have a sensitivity to flame radiation at least as good as that of the human eye, as verified in normal-gravity testing. *In 1g testing at NASA Glenn (conducted by Amy Mielke in 2001), the Hamamatsu H5784-06 was shown to be approximately one to two orders of magnitude more sensitive than the human eye where blue and yellow ethylene Santoro burner flames were viewed at a distance of about 120 mm.*[3]

3.7.5. The measurements shall be made as fast a possible and at a sampling rate of at least 120 samples/s with a temporal resolution (i.e., response time) of no more than 0.005 s and as short as possible.[2-4]

3.7.6. The chemiluminescent emission sensors shall be ORU(s) and removable from the ACME CIA during spaceflight *to increase the insert's ability to accommodate future experiments. It is suggest that all three sensors could be removed as a single ORU.**

3.8. Ion Current (E-FIELD Flames)

SDEPs: 2A1-8; 2B1-3,5; 2C1-5; 2D1,3-5

It is expected that the ion current will be measured indirectly by measuring the voltage drop across a current sense resistor of known value and computing $I = V/(R_{sense}+R_{DA})$. *This is how the measurement has been made in the ground-based testing.*

3.8.1. Ion current produced between the burner and mesh electrode shall be measured.[2]

3.8.2. The amplitude of the ion current measurement shall be over a range of at least 0 to 25 microamps. *The direction of the ion current in the circuit depends of the mesh polarity.*[2]

3.8.3. The ion current shall be measured with an error as small as possible that is no more than the larger of ±5% of the reading or ±0.05 microamps. *In laboratory testing, it is possible to get less than 1%.*[2]

3.8.4. The measurements shall be made at a frequency of at least 120 samples/s, and as high as possible, with a temporal resolution (i.e., response time) of 1 ms or less.[2]

3.9. Post-Test Gas Composition (primarily Flame Design and s-Flame)

It is expected that these requirements would be met with the CIR's Gas Chromatograph Instrumentation Package (GCIP), if and when it is launched and made functional. This measurement is generally only of significant interest for the spherical flame tests.

3.9.1. Unless waived by the Project Scientist, the CIR's GCIP shall optionally be used when available for post-test analysis of the chamber gas composition (1) immediately after extinction and/or (2) after complete mixing of the chamber contents but before any gases are added to or removed from the chamber, e.g., for scrubbing.[<3,*]

3.9.2. If possible, the concentrations of at least the following gases shall be measured: CO, CO_2, CH_4, C_2H_2, C_2H_4, N_2, and O_2.[>3]

3.10. Heat Flux (BRE burner tests only)

SDEPs: 5A3,5; 5B3,5

It is strongly recommended that the measurements of the convective and radiative heat flux (i.e., totaled) be made using transducers manufactured by the Medtherm Corporation (www.pamir.com/medtherm-corporation.aspx). In their ground-based testing, the BRE PI team is using models 8-1.8-10SB-4-0-36-20425AT (where the sensor is 1/8" in diameter) and 4-10SB-1.4-0.43-4-36-21919T (which is 1/16" in diameter) for the 50-mm and 25-mm burners, respectively. Similar sensors are recommended for spaceflight, e.g., including the water cooling provisions to allow such testing in 1g even though they won't be used during spaceflight. However, some designations are not important for the spaceflight sensors, e.g., where the T designation is for a type T thermocouple where that specific type is not required (but temperature measurement is required; see 3.4.1). The sensors in the spaceflight hardware might use different mounting and the measurement range will likely be different. It is important to note that the maximum acceptable sensor (body) temperature is 200 °C. Additional information about the transducers and their integration into the ground-based burners can be found in Appendix D of this document and of course in the manufacturer's specification sheet (which may not be readily available on the web, but can be provided by the Project Scientist).

3.10.1. The heat flux onto the outlet surface of each BRE burner shall be measured with the Schmidt-Boelter thermopile type of heat flux transducer *because this type has a small temperature variation whereas the alternate Gardon type has a large temperature difference across the surface which adversely effects the heat transfer and analysis of results.*[>5,*]

3.10.2. The heat flux onto the outlet surface of each BRE burner shall be measured at two positions, namely at the center and an off-centered position where the sensor is centered at a radius of 10±0.1 and 15±0.1 mm for the 25 and 50 mm burners, respectively.[>5,*]

3.10.3. In diameter, each heat flux sensor shall be less than 10% of the diameter of the burner's outlet surface.[<5,*]

3.10.4. The surface of each sensor shall be flush (within 0.05 mm and as close as possible) with the burner outlet surface and shall face outward, i.e., downstream of the burner.[5,*]

3.10.5. The surface of each sensor shall be flat where its Field of View (FOV) is not restricted geometrically other than by the burner's rim.[5,*]

3.10.6. The surface of each sensor shall have an emissivity of at least 0.93 for a range of at least 0.6-15 microns.[5,*]

3.10.7. The measurement range shall be 0-50 kW/m^2.[5]

3.10.8. The measurements shall have a precision and accuracy of at least ±1% and ± 5% (of full scale), respectively, and as small as possible.[<5,*]

3.10.9. Saturation of the measurement shall be avoided as verified in ground-based testing that is pre-approved by the Project Scientist(s). *Drop testing may be required because the emission from 0g flames can be significantly different than from 1g flames.**

3.10.10. The heat flux shall be measured at 10 samples/s or faster with a response time of 0.5 s or faster.[>5,*]

4. Operational Requirements

The general science requirements are now combined in ACME's Science Operations Requirements Document (SORD), but this does not eliminate the importance of this section of the existing ISRD in describing the general operational sequences. However, these operational sequences should be considered as examples where the details are subject to change. For example, future ground-based or ISS testing may reveal that superior results are achieved when the igniter is preheated before the gas flows are initiated. The times specified in the ISRD shall also be considered as required examples, where it shall be possible to vary those times as described in the SORD. *Furthermore, it should be understood that the sequences in the ISRD don't fully address operational details associated with measurements, e.g., the position or range of positions for the Thin Filament Pyrometry (TFP). It should also be understood that the format of this ISRD section is not consistent between experiments, especially in regard to description of the pre-ignition and post-extinction steps.*

4.1. CLD Flame

The main goal of this experiment is to evaluate flame characteristics at the extremes of fuel dilution: both weak, highly-dilute flames, and sooting flames up to pure-fuel conditions. While such parameters as the extinction limits and potential smoke points within these flames can easily be determined in normal gravity, we will not know the exact microgravity limits until the experiment is run on the ISS. We therefore plan to execute an initial run for each fuel where we vary the flow velocities and dilution levels in order to determine the extinction limits and degree of soot production in microgravity. For extinction limits, the flow velocity will be slowly ramped until extinction is observed for a given dilution level. The dilution level will then be increased in 5% increments and the procedure repeated. Extinction can be detected

Table 4.1.1

Exploratory test procedures to determine final test limits.	
Extinction Limit Test	**Approx. Start Time**
1. Prepare chamber atmosphere	
2. Start coflow and fuel/inert flow at uplinked ignition condition (e.g., a 40% CH_4 flame or a 20% C_2H_4 flame)	0 sec.
3. Ignite flame and retract igniter	10 sec.

4. Slowly ramp flow (0.5 cm/s^2) to starting velocity, if needed 5. Begin scan for a specific dilution: Increase velocity at a rate of 0.5 cm/s^2 6. Stop test when extinction is detected by PMT or 50 cm/s is reached 7. Extinguish flame and vent the chamber to 1 bar 8. Reduce fuel concentration by 5% and repeat steps 2-7 for the next dilution 9. Keep reducing fuel concentration by 5% and repeating steps 2-7 until minimum fuel concentration (see test matrix in Tables 4 and 5) is reached 10. Reset apparatus	20 sec. 30 sec. 110 sec.
Sooting Limit Test (for smoke point of ethylene flames)	
1. Prepare chamber atmosphere 2. Start coflow and fuel/inert flow at uplinked ignition condition (e.g., a 40% C_2H_4 flame) 3. Ignite flame and retract igniter 4. Ramp flow velocity (at uplinked value) to 40% C_2H_4, 10 cm/s 5. Begin scan of 40% C_2H_4: Increase velocity at a rate of 0.5 cm/s^2 6. Stop test when 35 cm/s is reached 7. Extinguish the flame and vent chamber to 1 bar 8. Ignite flame, retract igniter, and ramp flow velocity (at uplinked value) to 45% C_2H_4, 10 cm/s 9. Begin scan of 45% C_2H_4: Increase velocity at a rate of 0.5 cm/s^2 10. Stop test when the velocity reaches the smoke point determined in the previous run, or 35 cm/s 11. Extinguish the flame and vent chamber to 1 bar 12. Repeat steps 8-11for 50% C_2H_4 13. Repeat steps 8-11 for 50% C_2H_4, double fuel velocity 14. Reset apparatus	0 sec. 10 sec. 20 sec. 30 sec. 80 sec.

quickly with a PMT, but the color imaging system, HiBMs camera, and ops imaging system will all be run during these scans to maximize the data collected. For sooting determination, the dilution level will be decreased in 5% increments and/or the flow velocity will be increased in 5 cm/s increments until soot is observed, and then continued until either a smoke point is reached or a predetermined upper limit is reached. These observations can be made using the ops and color imaging systems. The table below outlines the procedure to determine the extinction limits of the flames as well as identify any smoke points for the C_2H_4 flames. Based on the results of these scans, the exact test matrix can be modified as necessary for further runs.

Due to the large number of conditions to be tested and the limited amount of gases available (as many as 50+ conditions for each fuel), it is necessary to minimize the test time, while exploring as many conditions as possible. One experimental concern involves the stabilization time necessary to change between different flow conditions,

specifically when changing the ratio of fuel to inert. To minimize this time, the mixture ratio will be held fixed and the exit velocity will be varied. Varying the exit velocity has been observed to produce a steady flame within seconds. This improvement allows for data acquisition on the next test condition to begin without having to wait, minimizing the time necessary to navigate the range of flow conditions under investigation. Experiments in the coflow flame will be carried out in the order laid out in following table. They will follow one of two sequences: (a) varying flow conditions towards extinction, or (b) varying flow conditions to a sooting condition. First the chamber will be filled to a pressure of one atmosphere. Normal gravity tests of our 25 mm diameter coflow flames in an enclosed 43-liter chamber filled with argon indicate that the fill gas is not critical, since the coflow provides the local environment for the flame. *However, under microgravity conditions, the flames could exhibit greater sensitivity to the fill gas.* To investigate this, our first exploratory test for methane extinction will be carried out twice – once with air, and a second time with ambient nitrogen. Once the ambient environment is set, the igniter will be inserted and the coflow and fuel/inert flow will begin at predetermined ignition conditions. Once ignition is detected the igniter will be removed and the flow conditions set to the starting point of a particular experimental run. Ideally, the fuel dilution level used for a single run would also be used for ignition; however, in the more dilute cases removal of the igniter from the flame is anticipated to extinguish the flame. Therefore, those runs will begin in the moderately-dilute (or healthy) flame range for ignition purposes. The fuel dilution will be adjusted to the initial test case (if necessary) and then data acquisition will be carried out at the different fluid velocities until extinction is detected. Once the extinction limit is reached for a particular dilution level, the flow conditions will be reset to a healthy ignition setting and reignited.

Table 4.1.2

Coflow Laminar Diffusion Flame Overall Operational Sequence.	
Action	**Approx. Start Time**
1. Take reference images	-5 min.
2. Fill/scrub/vent chamber to 1 bar	
3. Start coflow and fuel/inert flow at ignition condition	0 sec.
4. Ignite flame and retract igniter	
5. Ramp flow velocity (at uplinked value) to initial test condition, if needed	10 sec.
6. Wait for flame to stabilize	20 sec.
7. Run data acquisition	30 sec.
8. Extinguish flame	
9. Repeat 2 to 8 until (10 cases each run): a) the extinction limit b) the sooting extreme Limits determined from exploratory tests. Continue at next dilution for test duration	
10. Take reference images, if applicable	
11. Downlink data	
12. Reset apparatus	

The (a) and (b) sequences may require somewhat different exposure times, as chemiluminescence images (a) require up to 10 second exposure lengths, and soot luminosity images (b) will saturate in less than one second for highly sooting flames. During the sooting experiments, chemiluminescence images will still be acquired and will be the determining factor for the total amount of time necessary for data acquisition at each test condition. Since the exposures used for the soot luminosity images are so much shorter than the chemiluminescence images, it will be possible to take exposures at several settings of the tunable color filter (for multi-colored pyrometry) in the same span of time. Similarly, it will be possible to take data with both the laser on and laser off at each flame condition for laser extinction and to translate the TFP array through the flame. The general assumptions made in calculating the times required for recording a single flame condition are that it will take 15 seconds for a single data acquisition cycle and 10 seconds to change flow conditions and allow the flame to stabilize. Since both our normal gravity and microgravity experiments on the KC-135 indicate that these flames will be stable, we anticipate reducing the framing rate of the imaging systems to optimize signal/noise and limit the amount of data that must be downloaded.

4.2. E-FIELD Flames

The E-FIELD experiment consists of 4 objectives corresponding to 4 series of tests using 2 different diffusion flame burner configurations. The first three test series provide the key fundamental information regarding the electrical character of diffusion flames and the influence of electric fields on soot formation; the final series focuses on electric field sensing and control of flames.

General Operations

Before any of the electric field experiments, the high voltage mesh should be installed (or moved into position). Leak current should be measured by sweeping the voltage from 0 to 10kV and 0 to -10kV with no flame present. A steep rise in current under these conditions indicates corona discharge and sets the upper limit on the potential. The test sequence involves a complete repeat voltage sweep with no flame to provide a point-by-point current leak measurement. A similar sweep should be completed following flame extinguishment at the end of a test set. Only ion current would need to be measured during the no-flame sweep. In addition, excessive leak current at relatively low voltage may indicate electron emission from carbon buildup on the gas jet flame tip. If the leak current exceeds 10% of the flame ion current, cleaning of the gas jet tip is requested. Cleaning consists of a manual wiping or possibly burning off the carbon with a modified flame condition. We expect this to be a rare request, but the continuous monitor of flameless ion current provides a reliable in-situ monitor. We assume that the chamber will be emptied and refilled approximately every 7-8 tests to minimize the oxygen concentration uncertainty in the test chamber. The exact times for settling and voltage steps may vary (they should be reconfigurable from the ground), but a nominal expected operational sequence for one chamber fill and the key measurement data sets are shown below.

(A) Voltage Sweep – collection of *VI curves (or VCC curves)* -- where the voltage is swept from 0-±5kV (or until flame blowout) and the ion current is monitored and recorded. The sweep will consist of a series of discrete steps, where a settling time is allowed after each voltage change. At the same time, color and OH* video records the flame shape and luminosity (both broadband flame and soot luminosity and OH* chemiluminescence) throughout the sweep. A typical step sweep might comprise: 15 second ignition & stabilization; 100 V/step, 0.3 sec settle between steps, and a 0.25 sec. ion current measurement at each point, to ±5kV or blowout. Blowout can be detected by a sharp drop in ion current. Expected run time is 50 seconds per sweep (not including a background current sweep with the flame off). However, the time between voltage steps for flame adjustment and data collection shall be adjustable via uplink between the values of 0-10 seconds.

Table 4.2.1

Voltage Sweep Procedure	Time
A. Prepare Chamber	
1. Fill chamber (with N_2 for coflow; O_2/N_2 for gas jet)	
2. Select fuel/diluent mixture	
B. Initiate Experiment	0 sec.
1. Initiate data acquisition	5 sec.
2. Initiate gas flows	5 sec
3. Ignite flame and retract igniter	8 sec.
4. Allow 10 seconds settling time	18 sec.
5. Set the desired voltage (initially to 0V)	19 sec.
6. Initiate high voltage power supply	20 sec.
C. Measurements[1]	
1. Wait 0.3 seconds for flame to settle	
2. Collect data over 0.5 seconds	
D. Step 100V (assuming approx. 5ms ramp)	
E. Repeat steps C & D until (+/-) 5kV or flame blowout	60.25 sec.
F. Pause in Experiment	
1. Stop gas flows/extinguish flame (zero ion current)	
2. Stop video	
3. Zero voltage	
G. Repeat Steps C-E without flame to measure leakage current. Stop testing if burner current leakage is at unacceptable level	100.5 sec.
H. Reverse high voltage polarity	
I. Repeat sequence steps (B)–(H)	201 sec.

[1]The time between voltage steps for flame adjustment and data collection shall be adjustable via uplink between the values of 0-10 seconds.

(B) ***Step Response***—This test will involve the rapid change of voltage from a base level to a much higher (or lower) level, while the ion current (and flame luminosity and shape) is monitored in time as it settles to its new steady value. The key measurable is the ion current as a function of time through the voltage step change and the flame's subsequent settling. As in test set (A), video, luminosity, and chemiluminescence will record flame behaviors in response to an instantaneous change in the electric field. A typical experiment sequence might comprise a 15 second ignition and stabilization, step changes on the order of hundreds of volts, and recording ion current for 2 seconds between step changes (where steps will not be limited to a single polarity). Settling time for these step changes in zero gravity (particularly, for soot related phenomena) may need to be adjusted via uplink; the test procedures shown are based on a nominal settling time observed in preliminary testing at 1g and the 2.2 Second Drop Tower. The range of times between voltage steps may vary between 0-100 seconds.

Table 4.2.2

Step Response Procedure	Time
A. Prepare Chamber	
1. Fill chamber (with N_2 for coflow; O_2/N_2 for gas jet)	
2. Select fuel/diluent mixture	
B. Initiate Experiment	0 sec.
1. Initiate data acquisition	5 sec.
2. Start gas flows	5 sec.
3. Ignite flame and retract igniter	8 sec.
4. Allow 10 seconds settling time	18 sec.
5. Set the desired voltage (initially to 0V)	19 sec.
6. Initiate high voltage power supply	20 sec.
C. Measurements (if blowout occurs anytime; zero voltage and proceed to Step D)	
1. Collect data over 2 seconds[1]	22 sec.
2. Step voltage 0V to 1000V; Collect data over 2 seconds[1]	24 sec.
3. Step voltage 1000V to -1000V; Collect data over 2 seconds[1]	26 sec.
4. Step voltage -1000V to 1000V; Collect data over 2 seconds[1]	28 sec.
5. Step voltage 1000V to -2000V; Collect data over 2 seconds[1]	30 sec.
6. Step voltage -2000V to 2000V; Collect data over 2 seconds[1]	32 sec.
7. Step voltage 2000V to -2000V; Collect data over 2 seconds[1]	34 sec.
8. Step voltage -2000V to 3000V; Collect data over 2 seconds[1]	36 sec.
9. Step voltage 3000V to -3000V; Collect data over 2 seconds[1]	38 sec.
10. Step voltage -3000V to 4000V; Collect data over 2 seconds[1]	40 sec.
11. Step voltage 4000V to 5000V; Collect data over 2 seconds[1]	42 sec.
12. Step voltage 5000V to 0V; Collect data over 2 seconds[1]	44 sec.
13. Step voltage 0V to -4000V; Collect data over 2 seconds[1]	46 sec.
14. Step voltage -4000V to -5000V; Collect data over 2 seconds[1]	48 sec.
15. Step voltage -5000V to 0V; Collect data over 2 seconds[1]	50 sec.
16. Step voltage 0V to -1000V; Collect data over 2 seconds[1]	52 sec.
17. Step voltage -1000V to 0V; Collect data over 2 seconds[1]	54 sec.
18. Step voltage 0V to -500V; Collect data over 2 seconds[1]	56 sec.
19. Step voltage -500V to 0V; Collect data over 2 seconds[1]	58 sec.
20. Step voltage 0V to 1000V; Collect data over 2 seconds[1]	60 sec.
21. Step voltage 1000V to 500V; Collect data over 2 second[1]	62 sec.
22. Step voltage 500V to 0V; Collect data over 2 seconds[1]	64 sec.
D. Shut off gas flows (extinguish flame)	64 sec.
E. Repeat Step C beginning from 0V without flame to measure leakage current. Stop testing and report if leakage is at unacceptable level	106 sec.

[1]The time between voltage steps for flame adjustment and data collection shall be adjustable via uplink between the values of 0-10 seconds.

(C) ***Electric Field Effects on Soot*** – The following tests will demonstrate the effects of electric fields on soot (measured by broadband emission from the flame and soot volume fraction) by slowly increasing the coflow air velocity, comparing the flame structure at each step to a flame affected purely by electric forcing. Conditions will be uplinked and derived from experiments (A) and (B). Timing will depend on the

burner, but each test will be allowed at least 100 seconds. Also, note that the step time between one coflow velocitity and the next shall be adjustable via uplink between the values of 0-10 seconds. Broad solid angle collection luminosity, flame images along with soot volume fraction and soot pyrometry will be collected.

Table 4.2.3

Electric Field Effects on Soot	Time
A. Prepare Chamber	
1. Fill chamber (with N_2 for coflow; O_2/N_2 for gas jet)	
2. Select fuel/diluent mixture	
B. Initiate Experiment	0 sec.
1. Initiate data acquisition	5 sec.
2. Start gas flows (with coflow at 0 cm/s)	5 sec.
3. Ignite flame and retract igniter	8 sec.
4. Allow 10 seconds settling time	18 sec.
5. Set the desired voltage (initially to 0V)	19 sec.
6. Initiate high voltage power supply	20 sec.
C. Collect reference data for 1 second	21 sec.
D. Measurements	
1. Increase coflow velocity to 1cm/s; collect over 3 sec. [1]	24 sec.
2. Increase coflow velocity to 2cm/s; collect over 3 sec. [1]	27 sec.
3. Increase coflow velocity to 3cm/s; collect over 3 sec. [1]	30 sec.
4. Increase coflow velocity to 4cm/s; collect over 3 sec. [1]	33 sec.
5. Increase coflow velocity to 5cm/s; collect over 3 sec. [1]	36 sec.
6. Increase coflow velocity to 6cm/s; collect over 3 sec. [1]	39 sec.
7. Increase coflow velocity to 7cm/s; collect over 3 sec. [1]	42 sec.
8. Increase coflow velocity to 8cm/s; collect over 3 sec. [1]	45 sec.
9. Increase coflow velocity to 9cm/s; collect over 3 sec. [1]	48 sec.
10. Increase coflow velocity to 10cm/s; collect over 3 sec. [1]	51 sec.
11. Increase coflow velocity to 11cm/s; collect over 3 sec. [1]	54 sec.
12. Increase coflow velocity to 12cm/s; collect over 3 sec. [1]	57 sec.
13. Increase coflow velocity to 13cm/s; collect over 3 sec. [1]	60 sec.
14. Increase coflow velocity to 14cm/s; collect over 3 sec. [1]	63 sec.
15. Increase coflow velocity to 15cm/s; collect over 3 sec. [1]	66 sec.
16. Increase coflow velocity to 16cm/s; collect over 3 sec. [1]	69 sec.
17. Increase coflow velocity to 17cm/s; collect over 3 sec. [1]	72 sec.
18. Increase coflow velocity to 18cm/s; collect over 3 sec. [1]	75 sec.
19. Increase coflow velocity to 19cm/s; collect over 3 sec. [1]	78 sec.
20. Increase coflow velocity to 20cm/s; collect over 3 sec. [1]	81 sec.
21. Increase coflow velocity to 21cm/s; collect over 3 sec. [1]	84 sec.
22. Increase coflow velocity to 22cm/s; collect over 3 sec. [1]	87 sec.
23. Increase coflow velocity to 23cm/s; collect over 3 sec. [1]	90 sec.
24. Increase coflow velocity to 24cm/s; collect over 3 sec. [1]	93 sec.
25. Increase coflow velocity to 25cm/s; collect over 3 sec. [1]	96 sec.
F. Stop gas flows/extinguish flame	

[1]The time between voltage steps for flame adjustment and data collection shall be adjustable via uplink between the values of 0-10 seconds.

Note: return to step B and reignite as needed if flame fails during experiment

(D) ***Open Loop Sensing and Control*** – The experiments associated with control will be uplinked, based on the results of the above baseline mapping experiments (A) and (B) above. Timing will depend on the condition, but each test will be allowed at least 70 seconds. The procedure is a series of voltage ramps (or small steps with continuous data collection). Ion current and luminosity (broadband and CH*) fluctuations will be collected as well as flame images. The time between voltage changes for flame adjustment and data collection shall be adjustable via uplink between the values of 0-10 seconds.

Table 4.2.4

Open Loop Sensing and Control	Time
A. Prepare Chamber	
1. Fill chamber (with N_2 for coflow; O_2/N_2 for gas jet)	
2. Select fuel/diluent mixture	
B. Initiate Experiment	0 sec.
1. Initiate data acquisition	5 sec.
2. Start gas flows	5 sec.
3. Ignite flame and retract igniter	8 sec.
4. Allow 10 seconds settling time	18 sec.
5. Set the desired voltage (initially to 0V)	19 sec.
6. Initiate high voltage power supply	20 sec.
C. Collect reference data for 1 second	21 sec.
D. Set voltage to V*, the initial (lifted or sooting) condition identified in prior tests	
E. Measurements	
1. Collect data over 1 seconds	22 sec.
2. Step voltage -300V to V*-300V; Collect data over 1.0 second [1]	23 sec.
3. Ramp at +100V/s (or step +50V) while collecting data over 0.5 sec	23.5 sec.
4. Collect data at V*-250V over 1.0 second [1]	24.5 sec.
5. Ramp at +100V/s (or step +50V) while collecting data over 0.5 sec	25 sec.
6. Collect data at V*-200V over 1.0 second [1]	26 sec.
7. Ramp at +100V/s (or step +50V) while collecting data over 0.5 sec	26.5 sec.
8. Collect data at V*-150V over 1.0 second [1]	27.5 sec.
9. Ramp at +100V/s (or step +50V) while collecting data over 0.5 sec	28 sec.
10. Collect data at V*-100V over 1.0 second [1]	29 sec.
11. Ramp at +100V/s (or step +50V) while collecting data over 0.5 sec	29.5 sec.
12. Collect data at V*-50V over 1.0 second [1]	30.5 sec.
13. Ramp at +100V/s (or step +50V) while collecting data over 0.5 sec	31 sec.
14. Collect data at V* over 1.0 second [1]	32 sec.
15. Ramp at +100V/s (or step +50V) while collecting data over 0.5 sec	32.5 sec.
16. Collect data at V*+50V over 1.0 second [1]	33.5 sec.
17. Ramp at +100V/s (or step +50V) while collecting data over 0.5 sec	34 sec.
18. Collect data at V*+100V over 1.0 second [1]	35 sec.
19. Ramp at +100V/s (or step +50V) while collecting data over 0.5 sec	35.5 sec.
20. Collect data at V*+150V over 1.0 second [1]	36.5 sec.
21. Ramp at +100V/s (or step +50V) while collecting data over 0.5 sec	37 sec.
22. Collect data at V*+200V over 1.0 second [1]	38 sec.
23. Ramp at +100V/s (or step +50V) while collecting data over 0.5 sec	38.5 sec.
24. Collect data at V*+250V over 1.0 second [1]	39.5 sec.
25. Ramp at +100V/s (or step +50V) while collecting data over 0.5 sec	40 sec.
26. Collect data at V*+300V over 1.0 second [1]	41 sec.
27. Step to 0; collect data for 2 seconds	43 sec.
F. Stop gas flows/extinguish flame	43 sec.
G. Repeat Steps C-E with no flame to determine current leakage	65 sec.

[1]The time between voltage steps for flame adjustment and data collection shall be adjustable via uplink between the values of 0-10 seconds.

* - Voltage level determined to affect soot or liftoff from previous experiments

Note: return to step B and reignite as needed if flame fails during experiment

4.3. Flame Design

The Flame Design operational sequences are summarized in the tables below.

Table 4.3.1

Operational Sequence for Flame Design Spherical Flame Tests	
Action	**Approx. Time**
1. Ensure that 6.4 mm spherical burner is installed. Preflow the burner fluent gas at the composition of the upcoming test point to flush the plumbing system.	
2. Establish chamber conditions. These consist of a set point pressure and species compositions, as specified in the test matrix. Conditions are obtained in four ways: from cabin air (desired); from the preceding test; from scrubbing and replenishing; or from a complete evacuation and recharge.	
3. Allow chamber contents to reach equilibrium. A hold time of 5 minutes is required for quiescent, isothermal, and well-mixed conditions.	
4. Take reference images (if applicable). Establish framing rates for video cameras. Begin color imaging. Begin monitoring measurements. After 15 s, commence fluent flow, ignite flame, and retract ignitor.	-15 s 0 s
Perform either Steps 5, 6, and 8 **OR** Steps 7 and 8.	
5. <u>Soot inception limit.</u> Allow the flame to pass its soot-inception limit. Continuously record temperature distributions.	15 s
6. <u>Radiative extinction.</u> Detect radiative extinction with a PMT or with near real-time video. Continuously record temperature distributions. At uplinkable time (estimated 3 s) after extinction, reduce flow rate by uplinkable amount (estimated 50%) for uplinkable time (estimated 5 s) to confirm extinction. If the flame reappears, return to the initial flow rate and return to the beginning of Step 6. Otherwise terminate the fluent flow.	30 s
7. <u>Kinetic extinction.</u> After an uplinkable time (estimated 10 s), decrease fluent flow rate linearly in time such that flow rate becomes zero at uplinkable time (estimated 30 s) after ignition. Detect kinetic extinction with a PMT or with near real-time video. Continuously record temperature distributions. At uplinkable time (estimated 3 s) after extinction detection, increase flow rate by uplinkable amount (estimated 100%) for uplinkable time (estimated 5 s) to confirm extinction. If the flame reappears, return to the initial flow rate and return to the beginning of Step 7. Otherwise terminate the fluent flow.	10 s 30 s
8. Record reference images (if applicable). After 60 s terminate color imaging and monitoring measurements. Select data for downlink and downlink data.	30 s

Table 4.3.2

Operational Sequence for Flame Design Coflow Flame Tests	
Action	**Approx. Time**
1. Preflow the inner and outer jet gases at the composition of the upcoming test point to flush the plumbing system.	
2. Establish chamber conditions, normally N_2 at a set point pressure. Conditions are obtained in two ways: from scrubbing and replenishing; or from a complete evacuation and recharge.	
3. Allow chamber contents to reach equilibrium. A hold time of 5 minutes is required for quiescent, isothermal, and well-mixed conditions.	-5 min
4. Take reference images (if applicable). Establish framing rates for video cameras. Begin color imaging. Begin monitoring measurements. After 15 s, commence inner and outer jet flow rates (see test matrix), ignite flame, and retract ignitor. Adjust inner jet flow rate for a luminous flame length of approximately 20 mm, based on experience and/or near real-time video.	-15 s 0 s
5. Ramp the inert jet inert flow rate at an uplinkable (slow) rate. This will allow a quasi-steady flame at its half-blue soot limit to be observed in the video record during and after the test. Continuously record temperature distributions for an uplinkable time (estimated 30 s).	5 s
6. Terminate fluent flow. Record reference images (if applicable). After 60 s terminate color imaging and monitoring measurements. Select data for downlink and downlink data.	30 s

4.4. s-Flame

Table 4.4.1

s-Flame Operational Sequence	
Action	**Approx. Start Time**
I. Establish chamber at constant pressure and species concentration.	
II. Discharge fuel mixture through porous burner at the initial flow rate.	0 s
III. Ignite fuel mixture with hot wire coil and retract upon successful ignition.	0 s
IV. Allow for spherical diffusion flame to evolve.	
V. Apply one of the following: a. Maintain flow rate with same initial mixture for duration of test (25 s) or until extinction. b. Single step decrease in flow rate with same initial mixture at specified time, maintaining new flow rate for duration of test (25 s) or until extinction.	
VI. Terminate fuel supply to the burner after 25s.	25 s

The proposed flight experiment plan maximizes the value of a single test by satisfying multiple scientific objectives. The priority of the scientific objectives to be examined are ordered for both non-sooty and sooty flames:
*(**A**) Transient phenomenon leading toward steady flame*
*(**B**) Extinction phenomenon at "quasi-steady"-states*
*(**C**) Instability phenomenon, e.g. Le > 1 oscillations and Le < 1 wrinkling*
*By ignition with the flame not situated at the steady flame location, we will automatically observe (**A**). In studying (**B**), we may perhaps observe (**C**). So objectives (**A**), (**B**), and (**C**) may all be addressed by conducting a single experiment.*

4.5. BRE

The BRE operational sequence is shown in Table 4.5.1. *Approximate times shown are at the start of each step. A single operational test procedure can accomplish two objectives, (1) and (2) as listed in 2.2. Both quasi-steady burning and extinction are accomplished by the sequence in Table 5, specifically item 6. The ignition process should commence for a given fuel mixture at about 1 g/m^{2}s of hydrocarbon fuel.*

Table 4.5.1

BRE Operational Sequence	
Action	**Approx. Start Time**
1. Ensure that the appropriate burner is installed. Preflow the burner fluent gas at the composition of the upcoming test point to flush the plumbing system. 2. Establish chamber conditions. These consist of a set point pressure and species compositions, as specified in the test matrix. Conditions are obtained in four ways: from cabin air (desired); from the preceding test; from scrubbing and replenishing; or from a complete evacuation and recharge. 3. Allow chamber contents to reach equilibrium. A hold time of 5 minutes is required for quiescent, isothermal, and well-mixed conditions. 4. Take reference images (if applicable). Establish framing rates for video cameras. Begin color imaging. Begin monitoring measurements and wait 15 s.	
5. Commence fluent flow at a value to be uplinked. The initial value should correspond to about 1 g/m^2-s of hydrocarbon fuel. Energize igniter to ignite the flame and then retract igniter. If ignition does not occur within 5 seconds, shut off the flow. A new value of flow rate will be specified by uplink. If flame ignites, proceed to Step 6. Otherwise proceed to Step 7.	0 s
6. Set the flow rate to the test flow rate. Anytime during this step, if the flame extinguishes, or either heat flux sensor exceeds a critical temperature, stop the fuel flow. Continue until the surface burner temperatures become quasi-steady. Then reduce the flow rate in 10% increments of the test flow rate, hold for 15 s, and continue such reductions until extinction.	5 s
7. Stop fluent flow. Record reference images (if applicable). After 60 s terminate color imaging and monitoring measurements. Select data for downlink and downlink data.	60 s

5. Test Matrices

ACME's combined test matrix (which is a spreadsheet) largely duplicates this section of the ISRD. Although an effort was made to limit the required test matrices to a maximum of about 50 tests (i.e., ignitions) - or alternately 50 minutes of flame - per experiment, there was no target established for the highly desired or desired tests. As a result, there is a large variation between the number of these tests between experiments and a large number of such tests overall. The initial chamber pressure is specified in both atmospheres and bar in the current ISRD, whereas it should be consistently in atmospheres for all tests. *For example, where the ISRD specifies 1 bar, it should be interpreted as 1 atmosphere even though the two pressures are slightly different.*

5.1. CLD Flame

Once the full range of flow conditions to investigate has been determined using the initial exploratory procedure to establish extinction and sooting smoke-point limits, the plan for additional test cases will be finalized. Test matrices detailing the range of flames to be tested in the exploratory tests are provided in next three tables. Exploratory tests to determine the extinction limits of CH_4 and C_2H_4 are provided in Tables 5.1.1 and 5.1.2, respectively. Table 5.1.3 presents the tests to determine the smoke points (if any) of the C_2H_4 flames. Table 5.1.4 outlines a detailed preliminary test matrix for the CH_4 flames, and Table 5.1.5 outlines a detailed preliminary test matrix for the C_2H_4 flames. These test matrices have been laid out using observations of these flames at normal gravity coupled with the expectation that there will be a wider range of flames that can be stabilized under microgravity conditions.

Experimental runs have been split up into groups of ~10 tests so that a run will include ~4-5 min of testing. Dilution levels with fewer test cases have been grouped together in an effort to minimize the number of times the experimental apparatus will have to be reset.

With the exception of the tests specified in ISRD table 5.1.1, the chamber atmosphere shall be either 100% nitrogen or 21/79 O2/N2 on a volume (molar) basis if the flame is respectively insensitive or sensitive to the chamber atmosphere in the table 5.1.1 tests.

Table 5.1.1

Test matrix for exploratory tests of the extinction limits of methane.
Burner: coflow
Flow velocity: 15 cm/s to 50 cm/s for both nozzle and coflow (i.e., matched)
Test type: extinction detection
To verify the insensitivity of the flames to the ambient environment, this will be carried out twice – once with air, and a second time with ambient nitrogen.

Run	Test #	% CH4 (%N2)	Comments
A	1	40% (60%)	HIGHLY DESIRED Initial run; ambient will be air. Chemiluminescence will be monitored using a PMT to determine the velocity that causes extinction at this dilution level. The flow velocity will begin at 15 cm/s and will be ramped slowly at 0.5 cm/s2 until extinction is detected, or 50 cm/s is reached.
	2	35% (65%)	HIGHLY DESIRED Same as above.
	3	30% (70%)	REQUIRED Same as above.
	4	25% (75%)	HIGHLY DESIRED Same as above.
	5	20% (80%)	REQUIRED Same as above.
	6	15% (85%)	REQUIRED Same as above. *There may not be a stable flame at this dilution level.*
B	1	40% (60%)	HIGHLY DESIRED Duplicate run; ambient will be nitrogen. 50 cm/s detection Chemiluminescence will be monitored using a PMT to determine the velocity that causes extinction at this dilution level. The flow velocity will begin at 15 cm/s and will be ramped slowly at 0.5 cm/s2 until extinction is detected, or 50 cm/s is reached.
	2	35% (65%)	HIGHLY DESIRED Same as above.
	3	30% (70%)	REQUIRED Same as above.
	4	25% (75%)	HIGHLY DESIRED Same as above.
	5	20% (80%)	REQUIRED Same as above.
	6	15% (85%)	REQUIRED Same as above. *There may not be a stable flame at this dilution level.*

Table 5.1.2

Test matrix for exploratory tests of the extinction limits of ethylene. Burner: coflow Flow velocity: 10 cm/s to 50 cm/s for both nozzle and coflow (i.e., matched) Test type: extinction detection			
Run	**Test #**	**% C2H4 (%N2)**	**Comments**
C	1	20% (80%)	REQUIRED Chemiluminescence will be monitored 50 cm/s detection using a PMT to determine the velocity that causes extinction at this dilution level. The flow velocity will begin at 10 cm/s and will be ramped slowly at 0.5 cm/s2 until extinction is detected, or 50 cm/s is reached.
	2	15% (85%)	REQUIRED Same as above.
	3	10% (90%)	REQUIRED Same as above. *There may not be a stable flame at this dilution level.*

Table 5.1.3

Test matrix for exploratory tests of the smoke points of ethylene. Burner: coflow Flow velocity: 10 cm/s to 35 cm/s for both nozzle and coflow (i.e., matched) Test type: smoke point detection			
Run	**Test #**	**% C2H4 (%N2)**	**Comments**
D	1	40% (60%)	DESIRED The sooting tendency of the flames 35 cm/s detection will be monitored with color photography. The flow velocity will begin at 10 cm/s and will be ramped slowly at 0.5 cm/s2 until 35 cm/s is reached.
	2	45% (55%)	DESIRED The sooting tendency of the flames 35 cm/s detection will be monitored with color photography. The flow velocity will begin at 10 cm/s and will be ramped slowly at 0.5 cm/s2 until 35 cm/s is reached, or to the smoke point observed in the previous run.
	3	50% (50%)	REQUIRED Same as above.
	4	50% (50%) (double-velocity fuel flow)*	REQUIRED *Same as above, but in this test, the flow velocity of the fuel and inert are doubled. The coflow is still run at the velocity listed.

Table 5.1.4

Test matrix for methane.
Burner: coflow
Note: v(bo) is the velocity at blow off determined from exploratory tests

Run	Test #	% CH4 (%N2)	Velocity (cm/s)	Test Type	Comments
1	1 2 3 4 5 6 7 8 9 10	15% (85%)	10 15 20 25 30 v(bo)-4 v(bo)-3 v(bo)-2 v(bo)-1 v(bo)-0.5	extinction/ lifted	REQUIRED Chemiluminescence will be monitored to determine the lift-off height and extinction limit. Tests may be removed from (or added to) this run based on the initial exploratory test. *There may not be a stable flame at this dilution level.*
2	11 12 13 14 15 16 17 18 19 20	20% (80%)	10 15 20 25 30 v(bo)-4 v(bo)-3 v(bo)-2 v(bo)-1 v(bo)-0.5	extinction/ lifted	REQUIRED Chemiluminescence will be monitored to determine the lift-off height and extinction limit. Tests may be removed from (or added to) this run based on the initial exploratory test.
3	21 22 23 24 25 26 27 28 29 30	30% (70%)	10 15 20 25 30 v(bo)-4 v(bo)-3 v(bo)-2 v(bo)-1 v(bo)-0.5	extinction/ lifted	REQUIRED Chemiluminescence will be monitored to determine the lift-off height and extinction limit. Tests may be removed from (or added to) this run based on the initial exploratory test.
4	31 32 33 34 35	40% (60%)	15 20 25 30 35	dilute/ lifted	HIGHLY DESIRED Chemiluminescence will be monitored to determine the lift-off height and flame shape as a function of velocity. Smaller velocity increments may be added for the 40% (60%) flame.
	36 37 38 39	50% (50%)	20 25 30 35		
5	40 41 42	60% (40%)	25 30 35	moderate/ lifted	DESIRED Chemiluminescence will be monitored to determine the lift-off height and flame shape as a function of velocity.
	43 44 45	65% (35%)	25 30 35		
	46 47 48	70% (30%)	25 30 35		
6	49 50 51	80% (80%)	25 30 35	sooting	REQUIRED The transition towards sooting will be monitored as the fluid velocity is increased and the dilution level decreased.
	52 53 54	90% (10%)	25 30 35		
	55 56 57	100% (0%)	25 30 35		

Table 5.1.5

Test matrix for ethylene.
Burner: coflow
Note: v(bo) is the velocity at blow off determined from exploratory tests

Run	Test #	% C2H4 (%N2)	Velocity (cm/s)	Test Type	Comments
7	58 59 60 61 62 63 64 65 66 67	10% (90%)	10 15 20 25 30 v(bo)-4 v(bo)-3 v(bo)-2 v(bo)-1 v(bo)-0.5	extinction/ lifted	REQUIRED Chemiluminescence will be monitored to determine the lift-off height and extinction limit. Tests may be removed from (or added to) this run based on the initial exploratory test.
8	68 69 70 71 72 73 74 75 76 77	15% (85%)	10 15 20 25 30 v(bo)-4 v(bo)-3 v(bo)-2 v(bo)-1 v(bo)-0.5	extinction/ lifted	REQUIRED Chemiluminescence will be monitored to determine the lift-off height and extinction limit.
9	78 79 80 81 82 83 84 85 86 87	20% (80%)	10 15 20 25 30 v(bo)-4 v(bo)-3 v(bo)-2 v(bo)-1 v(bo)-0.5	dilute/ lifted	HIGHLY DESIRED Chemiluminescence will be monitored to determine the lift-off height and extinction limit.
10	88 89 90 91 92 93	30% (70%)	10 15 20 25 30 35	moderate/ lifted	DESIRED Chemiluminescence will be monitored to determine the lift-off height and flame shape as a function of velocity.
	94 95 96 97 98 99	40% (60%)	10 15 20 25 30 35		
11	100 101 102 103 104 105	50% (50%)	10 15 20 25 30 35	sooting	REQUIRED The transition towards sooting will be monitored as the fluid velocity is increased and the dilution level decreased. * In test #'s 106-111 above, the flow velocity of the fuel and inert are doubled to twice the value listed in the "Velocity" column. The coflow is still run at the velocity listed.
	106 107 108 109 110 111	50% (50%) (double-velocity fuel flow)*	10 15 20 25 30 35		

The test matrices presented above were created with two goals in mind: to investigate weak, dilute flames as they approach extinction, and to investigate the sooting tendencies of richer flames. In all cases, flames are lifted off the burner surface so that heat transfer to the burner can be neglected in the computations. This approach has been observed to work well for all cases of the methane flames, whereas moderate heating of the burner surface has been observed for some cases of the ethylene flames. The laminar flame speed of ethylene is higher than that of methane, causing lift-off heights to decrease by approximately a factor of two. For nonsooting flames, this decrease in lift-off height does not create any burner heating. However, the more heavily sooting cases have been observed to cause moderate heat transfer to the burner, which becomes a problem in the ethylene flames since they have a higher propensity to soot, particularly at microgravity. The 50% C_2H_4 / 50% N_2 flame has been observed to be the lowest level of dilution that ensures the room temperature boundary condition at the burner surface to be a good assumption for the computations. By increasing the fuel flow rate by a factor of 2 (as shown in Test #'s 106-111 in Table 5.1.5), the overall amount of soot and the size of the sooting region are increased (at 1 g), with the sooting region substantially higher off the burner surface to prevent burner heating. Raising the sooting region further off the burner surface becomes more important under microgravity conditions as the lift-off height decreases relative to 1 g conditions due to the increased importance of axial diffusion.

5.2. E-FIELD Flames

The two burners to be used are: (a) a simple gas jet nozzle with 2 sizes, 1.3 mm and 2.1 mm diameter (both required), and (b) a co-flow burner (same as in the CLD Flame study, desired). The former jet nozzle size matches our ground-based configuration and the latter size matches the inner (fuel) tube of the co-flow burner.

For the desired coflow tests, the chamber atmosphere shall be either 100% nitrogen or 21/79 O2/N2 on a volume (molar) basis if the flame is respectively insensitive or sensitive to the chamber atmosphere in the exploratory CLD Flame tests specified in ISRD table 5.1.1.

There are four basic experimental activities involving electric field effects.

Table 5.2.1

Test type	Test Purpose
Voltage Sweep: 1.35 mm gas jet; 2.13 mm gas jet; co-flow burner; two fuels; 3 dilution conditions; 3 flow rates.	*Identify flame shape changes, ion current per unit flame area, saturation current for fuel and dilution conditions, relationship between luminosity and electric field strength*
Step Response: 1.35 mm gas jet; 2.13 mm gas jet; co-flow burner; two fuels; 3 dilution conditions; 3 flow rates.	*Determine time response of the flame to sudden changes in electric field; provides the dynamic model for the flame to be used in control loops.*
Electric Field Effects on Soot: One gas jet and co-flow burner; 2 fuels; 3 dilution conditions	*Determine response of soot to electric fields; distinguish ion wind effects from direct chemi-ion influences; evaluate soot contribution to ion current; demonstrate the ability of electric fields to control soot.*
Open Loop Sensing and Control: co-flow burner; 2 fuels; 2 dilution conditions	*Identify sensitive regions with the operating map where the electric field can change liftoff and stability behavior.*

Table 5.2.2

Test Matrix: Gas Jet Flames - Required Tests
Burner: 1.3 and 2.1 mm gas-jet nozzles

Test #	Flow Conditions				Burner		Tests			
	CH4 (vol. fraction)	C2H4 (vol. fraction)	N2 (vol. fraction)	Flow Velocity (cm/sec)	1.3 mm	2.1 mm jet	Voltage sweep	Step response	Electric field effects on soot	Open loop control
1	1	0	0	15		X	X			
2	1	0	0	15		X		X		
3	0.3	0	0.7	15		X	X			
4	0.8	0	0.2	15		X	X			
5	0.8	0	0.2	15		X		X		
6	0.3	0	0.7	15		X				X
7	1	0	0	24		X	X			
8	0.3	0	0.7	24		X	X			
9	0.8	0	0.2	24		X	X			
10	0	1	0	15		X	X			
11	0	0.3	0.7	15		X	X			
12	0	0.8	0.2	15		X	X			
13	0	0.8	0.2	15		X		X		
14	0	0.3	0.7	15		X				X
15	0	1	0	24		X	X			
16	0	0.3	0.7	24		X	X			
17	0	0.8	0.2	24		X	X			
18	1	0	0	15	X		X			
19	1	0	0	15	X			X		
20	0.3	0	0.7	15	X		X			
21	0.8	0	0.2	15	X		X			
22	0.8	0	0.2	15	X			X		
23	0.3	0	0.7	15	X					X
24	1	0	0	24	X		X			
25	0.3	0	0.7	24	X		X			
26	0.8	0	0.2	24	X		X			
27	0	1	0	15	X		X			
28	0	0.3	0.7	15	X		X			
29	0	0.8	0.2	15	X		X			
30	0	0.8	0.2	15	X			X		
31	0	0.3	0.7	15	X					X
32	0	1	0	24	X		X			
33	0	0.3	0.7	24	X		X			
34	0	0.8	0.2	24	X		X			

Table 5.2.3

Test Matrix: Gas Jet Flames - Desired Tests
Burner: 1.3 and 2.1 mm gas-jet nozzles

	Flow Conditions				Burner		Tests			
Test #	CH4 (volume fraction)	C2H4 (vol. fraction)	N2 (volume fraction)	Flow Velocity (cm/sec)	1.3 mm	2.13mm jet	Voltage sweep	Step response	Electric field effects on soot	Open loop control
1	0.3	0	0.7	15		X		X		
2	1	0	0	19		X	X			
3	1	0	0	19		X		X		
4	0.3	0	0.7	19		X	X			
5	0.3	0	0.7	19		X		X		
6	0.8	0	0.2	19		X	X			
7	0.8	0	0.2	19		X		X		
8	0.3	0	0.7	19		X				X
9	0	1	0	15		X		X		
10	0	0.3	0.7	15		X		X		
11	0	1	0	19		X	X			
12	0	1	0	19		X		X		
13	0	0.3	0.7	19		X	X			
14	0	0.3	0.7	19		X		X		
15	0	0.8	0.2	19		X	X			
16	0	0.8	0.2	19		X		X		
17	0	0.3	0.7	19		X				X
18	1	0	0	19	X		X			
19	1	0	0	19	X			X		
20	0.3	0	0.7	19	X		X			
21	0.8	0	0.2	19	X		X			
22	0.8	0	0.2	19	X			X		
23	0.3	0	0.7	19	X					X
24	0	1	0	19	X		X			
25	0	0.3	0.7	19	X		X			
26	0	0.8	0.2	19	X		X			
27	0	0.8	0.2	19	X			X		
28	0	0.3	0.7	19	X					X

Table 5.2.4Test Matrix: Coflow Flames - Desired Tests

	Flow Conditions					Tests			
Test #	CH4 (vol. fraction)	C2H4 (vol. fraction)	N2 (vol. fraction)	Jet velocity (cm/s)	Coflow velocity (cm/sec)	Voltage sweep	Step response	Electric field effects on soot	Open loop control
1	1	0	0	15	3.125	X			
2	1	0	0	15	3.125		X		
3	0.3	0	0.7	15	3.125	X			
4	0.3	0	0.7	15	3.125			X	
5	0.8	0	0.2	15	3.125	X			
6	0.8	0	0.2	15	3.125		X		
7	0.8	0	0.2	15	3.125			X	
8	1	0	0	15	3.125			X	
9	0.3	0	0.7	15	3.125				X
10	1	0	0	15	5	X			
11	0.3	0	0.7	15	5	X			
12	0.8	0	0.2	15	5	X			
13	1	0	0	24	5	X			
14	0.3	0	0.7	24	5	X			
15	0.8	0	0.2	24	5	X			
16	0	1	0	15	3.125	X			
17	0	0.3	0.7	15	3.125	X			
18	0	0.3	0.7	15	3.125			X	
19	0	0.8	0.2	15	3.125	X			
20	0	0.8	0.2	15	3.125		X		
21	0	0.8	0.2	15	3.125			X	
22	0	1	0	15	3.125			X	
23	0	0.8	0.2	15	3.125				X
24	0	1	0	15	5	X			
25	0	0.3	0.7	15	5	X			
26	0	0.8	0.2	15	5	X			
27	0	1	0	24	5	X			
28	0	0.3	0.7	24	5	X			
29	0	0.8	0.2	24	5	X			
30	1	0	0	19	3.125	X			
31	1	0	0	19	3.125		X		
32	0.3	0	0.7	19	3.125	X			
33	0.3	0	0.7	19	3.125			X	
34	0.8	0	0.2	19	3.125	X			
35	0.8	0	0.2	19	3.125		X		
36	0.8	0	0.2	19	3.125			X	
37	1	0	0	19	3.125			X	
38	0.3	0	0.7	19	3.125				X
39	0	1	0	19	3.125	X			
40	0	0.3	0.7	19	3.125	X			
41	0	0.3	0.7	19	3.125			X	
42	0	0.8	0.2	19	3.125	X			
43	0	0.8	0.2	19	3.125		X		
44	0	0.8	0.2	19	3.125			X	
45	0	1	0	19	3.125			X	
46	0	0.8	0.2	19	3.125				X

5.3. Flame Design

Be aware that the test numbering in the current ISRD is misleading where most numbers indicate two ignitions, where one flame each is for radiative and kinetic extinction.

Three detailed test matrix tables are presented below, as follows.

Normal Spherical Flames: *These tests will emphasize measurements of three types of limits: sooting limits, radiative extinction limits, and kinetic extinction limits. Tests will involve normal convection direction. A smaller number of tests will consider long-term burns to evaluate the possible existence of steady flames. These tests support Objectives A – C.*

Table 5.3.1

Test Matrix: Flame Design Normal Spherical Flame Tests
Burner: 6.4 mm sphere.
Tests are identified by NS# (normal spherical), where # is the test point number.

Test	Fluent/ %	Ambient / %	Z_{st}	T_{ad} K	Comments
NS1	C_2H_4/100	O_2/21	0.064	2370	REQUIRED Do preliminary test of system operation, all diagnostics, and soot limit and extinction limits (see NS6). Use cabin air if possible.
NS2					REQUIRED Perform test of quasi-steady state flame.
NS3					REQUIRED Increase fuel flow rate until radiative extinction. Reduce fuel flow rate to confirm extinction.
NS4					REQUIRED Decrease fuel flow rate until kinetic extinction. Increase fuel flow rate to confirm extinction.
NS5					REQUIRED Increase inert flow rate until soot-inception limit. Increase inert flow rate until extinction. Decrease inert flow rate to confirm extinction.
Evacuate and recharge chamber.					
NS6	C_2H_4/100	O_2/40	0.112	2820	REQUIRED Identify soot-inception limit, with constant fuel and inert flow rates. Identify radiative extinction limit. Reignite and obtain kinetic extinction limit by reducing the total flow rate until extinction. Two flames will be observed.
NS7	C_2H_4/5		0.716	1692	REQUIRED Soot limit and extinction limits (see NS6)
NS8	C_2H_4/12.9		0.495	2370	REQUIRED Soot limit and extinction limits (see NS6)
Scrub and replenish chamber to obtain approximate results.					
~~NS9~~	~~C_2H_4/100~~	~~O_2/~30~~	~~0.088~~	~~2649~~	~~Soot limit and extinction limits (see NS6)~~
~~NS10~~	~~C_2H_4/5~~		~~0.657~~	~~1595~~	~~Soot limit and extinction limits (see NS6)~~

~~NS11~~	~~C_2H_4/10~~		~~0.490~~	~~2070~~	~~Soot limit and extinction limits (see NS6)~~
Evacuate and recharge chamber.					
NS12	C_2H_4/100	O_2/30	0.088	2649	REQUIRED Soot limit and extinction limits (see NS6)
NS13	C_2H_4/5		0.657	1595	REQUIRED Soot limit and extinction limits (see NS6)
NS14	C_2H_4/10		0.490	2070	REQUIRED Soot limit and extinction limits (see NS6)
Scrub and replenish chamber to obtain approximate results.					
~~NS15~~	~~C_2H_4/100~~	~~O_2/~21~~	~~0.064~~	~~2370~~	~~Soot limit and extinction limits (see NS6)~~
~~NS16~~	~~C_2H_4/5~~		~~0.576~~	~~1454~~	~~Soot limit and extinction limits (see NS6)~~
~~NS17~~	~~C_2H_4/10~~		~~0.405~~	~~1837~~	~~Soot limit and extinction limits (see NS6)~~
Evacuate and recharge chamber.					
NS18	C_2H_4/100	O_2/21	0.064	2370	REQUIRED Soot limit and extinction limits (see NS6)
NS19	C_2H_4/5		0.576	1454	REQUIRED Soot limit and extinction limits (see NS6)
NS20	C_2H_4/10		0.405	1837	REQUIRED Soot limit and extinction limits (see NS6)
Scrub and replenish chamber to obtain approximate results.					
~~NS21~~	~~C_2H_4/100~~	~~O_2/~10~~	~~0.032~~	~~1559~~	~~Soot limit and extinction limits (see NS6)~~
~~NS22~~	~~C_2H_4/20~~		~~0.141~~	~~1434~~	~~Soot limit and extinction limits (see NS6)~~
~~NS23~~	~~C_2H_4/40~~		~~0.076~~	~~1509~~	~~Soot limit and extinction limits (see NS6)~~
Evacuate and recharge chamber.					
NS24	C_2H_4/100	O_2/10	0.032	1559	REQUIRED Soot limit and extinction limits (see NS6)
NS25	C_2H_4/20		0.141	1434	REQUIRED Soot limit and extinction limits (see NS6)
NS26	C_2H_4/40		0.076	1509	REQUIRED Soot limit and extinction limits (see NS6)
Evacuate and recharge chamber.					
NS27	C_2H_4/20	O_2/40	0.387	2552	REQUIRED Soot limit and extinction limits (see NS6)
NS28	C_2H_4/40		0.240	2715	REQUIRED Soot limit and extinction limits (see NS6)
NS29	C_2H_4/60		0.174	2772	REQUIRED Soot limit and extinction limits (see NS6)
Scrub and replenish chamber to obtain approximate results.					
~~NS30~~	~~C_2H_4/19~~	~~O_2/~30~~	~~0.336~~	~~2370~~	~~Soot limit and extinction limits (see NS6)~~
~~NS31~~	~~C_2H_4/40~~		~~0.194~~	~~2552~~	~~Soot limit and extinction limits (see NS6)~~
~~NS32~~	~~C_2H_4/60~~		~~0.138~~	~~2606~~	~~Soot limit and extinction limits (see NS6)~~
~~**This completes the required normal spherical tests. All subsequent tests are highly desired or desired.**~~ Evacuate and recharge chamber.					
NS33	C_2H_4/19	O_2/30	0.336	2370	REQUIRED Soot limit and extinction limits (see NS6)
NS34	C_2H_4/40		0.194	2552	REQUIRED Soot limit and extinction limits (see NS6)
NS35	C_2H_4/60		0.138	2606	REQUIRED Soot limit and extinction limits (see NS6)
This completes the required normal spherical tests. All subsequent tests are highly desired or desired. Scrub and replenish chamber to obtain approximate results.					

~~NS36~~	~~C_2H_4/20~~	~~O_2/~21~~	~~0.254~~	~~2113~~	~~Soot limit and extinction limits (see NS6)~~
~~NS37~~	~~C_2H_4/40~~		~~0.145~~	~~2271~~	~~Soot limit and extinction limits (see NS6)~~
~~NS38~~	~~C_2H_4/60~~		~~0.102~~	~~2326~~	~~Soot limit and extinction limits (see NS6)~~
Evacuate and recharge chamber.					
NS39	C_2H_4/20	O_2/21	0.254	2113	HIGHLY DESIRED Soot limit and extinction limits (see NS6)
NS40	C_2H_4/40		0.145	2271	HIGHLY DESIRED Soot limit and extinction limits (see NS6)
NS41	C_2H_4/60		0.102	2326	HIGHLY DESIRED Soot limit and extinction limits (see NS6)
NS42 - NS68	C_2H_4/5 - C_2H_4/100	O_2 and CO_2			Highly desired: perform subset of tests NS6-32 with CO_2 as both fluent and ambient inert (circa 27 test points). Desired: scrub to remove H_2O, not CO_2.
NS69 - NS95	C_2H_4/5 - C_2H_4/100	O_2/15 - O_2/40			Highly desired: perform subset of tests NS6-32 at 0.2 bar (circa 27 test points).
NS96 – NS122	C_2H_4/5 - C_2H_4/100	O_2/15 - O2/40			Highly desired: perform subset of tests NS6-32 at 0.5 bar (circa 27 test points).
NS123 - NS149	CH_4/5 - CH_4/100	O_2/15 - O2/40			Desired: perform subset of tests NS6-32 with CH_4 as fuel (circa 27 test points).

Notes

[1]All tests are at 1 bar (or a setpoint pressure close to this) except Tests NS69-122.

[2]Fuel and diluents will come from bottles of pure fuel and pure diluent.

[3]Balance is N_2, except tests NS42-68.

[4]Different fuel and oxidizer mole fractions may be specified during uplink.

[5]For tests where the mole fraction is varied, the listed mole fraction is an estimate of the starting condition.

[6]Flow rates will be such that the C_2H_4 (or CH_4) mass consumption rate setpoint is 1.5 mg/s or a setpoint close to this (except tests NS3-4 and tests for kinetic extinction).

[7]It may be necessary to ignite at different flow rates and/or gas compositions than those specified above.

[8]Assuming scrubbing capability, the CO_2 and H_2O will be scrubbed after some tests, and reactants replenished as needed.

[9]Anticipated total video downlink time for Flame Design is 50 minutes. Full downlink will be required for the first few flames. Otherwise downlink will include 15 s intervals around the sooting and extinction limits and occasional 2 s intervals during the flame development stage.

Inverse Spherical Flames: *These tests will emphasize measurements of three types of limits: sooting limits, radiative extinction limits, and kinetic extinction limits. Tests will involve inverse convection direction. A smaller number of tests will consider long-term burns to evaluate the possible existence of steady flames. These tests support Objectives A – C.*

Table 5.3.2

Test Matrix: Flame Design Inverse Spherical Flame Tests
Burner: 6.4 mm sphere
Tests are identified by IS# (inverse spherical), where # is the test point number.

Test	Fluent/ %	Ambient/ %	Z_{st}	T_{ad} K	Comments
IS1	O_2/21	C_2H_4/30	0.185	2217	REQUIRED Perform preliminary test of system operation, all diagnostics, and soot limit and extinction limits (see IS6).
IS2					REQUIRED Perform test of quasi-steady state flame.
IS3					REQUIRED Increase oxidizer flow rate until radiative extinction. Reduce oxidizer flow rate to confirm extinction.
IS4					REQUIRED Decrease oxidizer flow rate until kinetic extinction. Increase oxidizer flow rate to confirm extinction.
IS5					REQUIRED Increase inert flow rate until soot-inception limit. Increase inert flow rate until extinction. Decrease inert flow rate to confirm extinction.
Scrub and replenish chamber to obtain approximate conditions.					
~~IS6~~	~~O_2/85~~	~~C_2H_4/~20~~	~~0.558~~	~~2818~~	~~Identify soot inception limit, with constant fuel and inert flow rates. Identify radiative extinction limit. Reignite and obtain kinetic extinction limit by reducing the total flow rate until extinction. Two flames will be observed.~~
~~IS7~~	~~O_2/10~~		~~0.141~~	~~1434~~	~~Soot limit and extinction limits (see IS6)~~
~~IS8~~	~~O_2/21~~		~~0.254~~	~~2113~~	~~Soot limit and extinction limits (see IS6)~~
Evacuate and recharge chamber.					
IS12	O_2/85	C_2H_4/10	0.718	2485	REQUIRED Soot limit and extinction limits (see IS6)
IS13	O_2/10		0.247	1307	REQUIRED Soot limit and extinction limits (see IS6)
IS14	O_2/21		0.405	1837	REQUIRED Soot limit and extinction limits (see IS6)
Scrub and replenish chamber to obtain approximate conditions.					
~~IS15~~	~~O_2/85~~	~~C_2H_4/~5~~	~~0.835~~	~~1875~~	~~Soot limit and extinction limits (see IS6)~~
~~IS16~~	~~O_2/21~~		~~0.576~~	~~1454~~	~~Soot limit and extinction limits (see IS6)~~
~~IS17~~	~~O_2/40~~		~~0.716~~	~~1692~~	~~Soot limit and extinction limits (see IS6)~~
Evacuate and recharge chamber.					
IS18	O_2/85	C_2H_4/30	0.457	2941	REQUIRED Soot limit and extinction limits (see IS6)
IS19	O_2/8		0.081	1289	REQUIRED Soot limit and extinction limits (see IS6)
IS20	O_2/21		0.185	2217	REQUIRED Soot limit and extinction limits (see IS6)
Scrub and replenish chamber to obtain approximate conditions.					
IS21	O_2/30	C_2H_4/~30	0.243	2498	REQUIRED

					Soot limit and extinction limits (see IS6)
IS22	O_2/50		0.342	2761	REQUIRED Soot limit and extinction limits (see IS6)
IS23	O_2/70		0.414	2885	REQUIRED Soot limit and extinction limits (see IS6)
Evacuate and recharge chamber.					
IS24	O_2/85	C_2H_4/20	0.558	2818	REQUIRED Soot limit and extinction limits (see IS6)
IS25	O_2/10		0.141	1434	REQUIRED Soot limit and extinction limits (see IS6)
IS26	O_2/21		0.254	2113	REQUIRED Soot limit and extinction limits (see IS6)
Scrub and replenish chamber to obtain approximate conditions.					
~~IS27~~	~~O_2/85~~	~~C_2H_4/~10~~	~~0.718~~	~~2485~~	~~Soot limit and extinction limits (see IS6)~~
~~IS28~~	~~O_2/10~~		~~0.247~~	~~1307~~	~~Soot limit and extinction limits (see IS6)~~
~~IS29~~	~~O_2/21~~		~~0.405~~	~~1837~~	~~Soot limit and extinction limits (see IS6)~~
Evacuate and recharge chamber.					
IS30	O_2/85	C_2H_4/5	0.835	1875	REQUIRED Soot limit and extinction limits (see IS6)
IS31	O_2/21		0.576	1454	REQUIRED Soot limit and extinction limits (see IS6)
IS32	O_2/40		0.716	1692	REQUIRED Soot limit and extinction limits (see IS6)
This completes the required inverse spherical tests. All subsequent tests are highly desired or desired.					
IS33 - IS59	O_2/5 - O_2/85	C_2H_4 and CO_2			Highly desired: perform subset of tests IS6-32 with CO_2 as both fluent and ambient inert (circa 27 test points). Desired: scrub to remove H_2O, not CO_2.
IS60 - IS86	O_2/5 - O_2/100	C_2H_4/5 - C_2H_4/40			Highly desired: perform subset of tests IS6-32 at 0.2 bar (circa 27 test points).
IS87 - IS113	O_2/5 - O_2/100	C_2H_4/5 - C_2H_4/40			Highly desired: perform subset of tests IS6-32 at 0.5 bar (circa 27 test points).
IS114 - IS140	O_2/5 - O_2/100	CH_4/5 - CH_4/50			Desired: perform subset of tests IS6-32 with CH_4 as fuel (circa 27 test points).

Notes

[1]All tests are at 1 bar (or a setpoint pressure close to this) except Tests IS60-113.

[2]Oxidizer will come from a bottle of 21% O_2 in N_2 (tests IS1-IS5) and 85% O_2 in N_2 (tests IS6-IS32). Any additional diluent needed for the oxidizer will come from a bottle of pure diluent.

[3]Balance is N_2, except tests IS33-59.

[4]Different fuel and oxidizer mole fractions may be specified during uplink.

[5]For tests where the mole fraction is varied, the listed mole fraction is an estimate of the starting condition.

[6]Oxidizer flow rates will be selected such that the C_2H_4 (or CH_4) mass consumption rate is 1.5 mg/s or a setpoint close to this (except tests IS3-4 and tests for kinetic extinction).

[7]It may be necessary to ignite at different flow rates and/or gas compositions than those specified above.

[8]Assuming scrubbing capability, the CO_2 and H_2O will be scrubbed after some tests, and reactants replenished as needed.

[9]Anticipated total video downlink time for Flame Design is 50 minutes. Full downlink will be required for the first few flames. Otherwise downlink will include 15 s intervals around the sooting and extinction limits and occasional 2 s intervals during the flame development stage.

~~***Coflow Flames:*** *These tests will emphasize inverse coflow flames (highly desired), and flames with high oxygen concentrations in the oxidizer, which are not permitted in the CIR for spherical flames. Measurements will emphasize sooting limits, defined here as half-blue limits. A half-blue soot limit is a condition where the lowest visible yellow emissions are half way between the burner tip and the visible flame tip.*~~

~~**Table 5.3.3**~~

~~**Test Matrix: Flame Design Coflow Flame Tests (Desired)**~~ ~~Burner: coflow~~ ~~Tests are identified by IC# (inverse coflow) or NC# (normal coflow), where # is the test point number. Fuel mole fraction will vary for all tests; the listed fuel mole fraction is for the ignition condition.~~					
~~**Test**~~	~~**Inner Jet Gas/%**~~	~~**Outer Jet Gas/%**~~	~~***Zst***~~	~~T_{ad} ***K***~~	~~**Comments**~~
~~Tests IC1-18 involve the coflow burner in inverse mode. Tests IC1-9 are highly desired. Tests IC10-18 are desired.~~ ~~Evacuate and recharge chamber with N2.~~					
~~IC1~~	~~O2/30~~	~~C2H4/ ~19~~	~~~0.336~~	~~~2370~~	~~At 1 bar, examine effects of flow rate and residence time. Vary fuel concentration to identify half-blue (soot inception) limit.~~
~~IC2~~	~~O2/30~~	~~C2H4/ ~19~~	~~~0.336~~	~~~2370~~	~~Vary fuel concentration to identify half-blue limit at 0.2 bar.~~
~~IC3~~	~~O2/30~~	~~C2H4/ ~19~~	~~~0.336~~	~~~2370~~	~~Find half-blue limit (see IC2) at 0.5 bar.~~
~~IC4~~	~~O2/30~~	~~C2H4/ ~19~~	~~~0.336~~	~~~2370~~	~~Find half-blue limit (see IC2) at 2 bar.~~
~~IC5~~	~~O2/50~~	~~C2H4/ ~11~~	~~~0.586~~	~~~2370~~	~~Find half-blue limit (see IC2) at 2 bar.~~
~~IC6~~	~~O2/50~~	~~C2H4/ ~11~~	~~~0.586~~	~~~2370~~	~~Find half-blue limit (see IC2) at 1 bar.~~
~~IC7~~	~~O2/50~~	~~C2H4/ ~11~~	~~~0.586~~	~~~2370~~	~~Find half-blue limit (see IC2) at 0.5 bar.~~
~~IC8~~	~~O2/50~~	~~C2H4/ ~11~~	~~~0.586~~	~~~2370~~	~~Find half-blue limit (see IC2) at 0.2 bar.~~
~~IC9~~	~~O2/85~~	~~C2H4/ ~9~~	~~~0.738~~	~~~2370~~	~~Find half-blue limit (see IC2) at 0.2 bar.~~
~~IC10~~	~~O2/85~~	~~C2H4/ ~9~~	~~~0.738~~	~~~2370~~	~~Find half-blue limit (see IC2) at 0.5 bar.~~
~~IC11~~	~~O2/85~~	~~C2H4/ ~9~~	~~~0.738~~	~~~2370~~	~~Find half-blue limit (see IC2) at 1 bar.~~
~~IC12~~	~~O2/85~~	~~C2H4/ ~9~~	~~~0.738~~	~~~2370~~	~~Find half-blue limit (see IC2) at 2 bar.~~
~~IC13~~	~~O2/85~~	~~C2H4/ ~9~~	~~~0.738~~	~~~2370~~	~~Perform test IC1 with CO2 as fuel inert and N2 as oxidizer inert at 1 bar.~~
~~IC14~~	~~O2/50~~	~~C2H4/~~	~~~0.586~~	~~~2370~~	~~Find half-blue limit (see IC2) with CO2 as fuel~~

		~~11~~			~~inert and N2 as oxidizer inert at 1 bar.~~
~~IC15~~	~~O2/30~~	~~C2H4/~19~~	~~~0.336~~	~~~2370~~	~~Find half-blue limit (see IC2) with CO2 as fuel inert and N2 as oxidizer inert at 1 bar.~~
~~IC16~~	~~O2/85~~	~~CH4/~9~~	~~~0.738~~	~~~2370~~	~~Perform test IC1 with CH4 as fuel at 1 bar.~~
~~IC17~~	~~O2/50~~	~~CH4/~11~~	~~~0.586~~	~~~2370~~	~~Find half-blue limit (see IC2) with CH4 as fuel at 1 bar.~~
~~IC18~~	~~O2/30~~	~~CH4/~19~~	~~~0.336~~	~~~2370~~	~~Find half-blue limit (see IC2) with CH4 as fuel at 1 bar.~~
~~Tests NC1-18 involve the coflow burner in normal mode. These tests are desired. Evacuate and recharge chamber with N2.~~					
~~NC1~~	~~C2H4/~19~~	~~O2/30~~	~~~0.336~~	~~~2370~~	~~At 1 bar, examine effects of flow rate and residence time. Vary fuel concentration to identify half-blue (soot-inception) limit.~~
~~NC2~~	~~C2H4/~19~~	~~O2/30~~	~~~0.336~~	~~~2370~~	~~Vary fuel concentration to identify half-blue limit at 0.2 bar.~~
~~NC3~~	~~C2H4/~19~~	~~O2/30~~	~~~0.336~~	~~~2370~~	~~Find half-blue limit (see NC2) at 0.5 bar.~~
~~NC4~~	~~C2H4/~19~~	~~O2/30~~	~~~0.336~~	~~~2370~~	~~Find half-blue limit (see NC2) at 2 bar.~~
~~NC5~~	~~C2H4/~11~~	~~O2/50~~	~~~0.586~~	~~~2370~~	~~Find half-blue limit (see NC2) at 2 bar.~~
~~NC6~~	~~C2H4/~11~~	~~O2/50~~	~~~0.586~~	~~~2370~~	~~Find half-blue limit (see NC2)at 1 bar.~~
~~NC7~~	~~C2H4/~11~~	~~O2/50~~	~~~0.586~~	~~~2370~~	~~Find half-blue limit (see NC2) at 0.5 bar.~~
~~NC8~~	~~C2H4/~11~~	~~O2/50~~	~~~0.586~~	~~~2370~~	~~Find half-blue limit (see NC2) at 0.2 bar.~~
~~NC9~~	~~C2H4/~9~~	~~O2/85~~	~~~0.738~~	~~~2370~~	~~Find half-blue limit (see NC2) at 0.2 bar.~~
~~NC10~~	~~C2H4/~9~~	~~O2/85~~	~~~0.738~~	~~~2370~~	~~Find half-blue limit (see NC2)at 0.5 bar.~~
~~NC11~~	~~C2H4/~9~~	~~O2/85~~	~~~0.738~~	~~~2370~~	~~Find half-blue limit (see NC2)at 1 bar.~~
~~NC12~~	~~C2H4/~9~~	~~O2/85~~	~~~0.738~~	~~~2370~~	~~Find half-blue limit (see NC2) at 2 bar.~~
~~NC13~~	~~C2H4/~9~~	~~O2/85~~	~~~0.738~~	~~~2370~~	~~Perform test NC1 with CO2 as fuel inert and N2 as oxidizer inert at 1 bar.~~
~~NC14~~	~~C2H4/~11~~	~~O2/50~~	~~~0.586~~	~~~2370~~	~~Find half-blue limit (see NC2) with CO2 as fuel inert and N2 as oxidizer inert at 1 bar.~~
~~NC15~~	~~C2H4/~19~~	~~O2/30~~	~~~0.336~~	~~~2370~~	~~Find half-blue limit (see NC2) with CO2 as fuel inert and N2 as oxidizer inert at 1 bar.~~
~~NC16~~	~~CH4/~9~~	~~O2/85~~	~~~0.738~~	~~~2370~~	~~Perform test NC1 with CH4 as fuel at 1 bar.~~
~~NC17~~	~~CH4/~11~~	~~O2/50~~	~~~0.586~~	~~~2370~~	~~Find half-blue limit (see NC2) with CH4 as fuel at 1 bar.~~
~~NC18~~	~~CH4/~19~~	~~O2/30~~	~~~0.336~~	~~~2370~~	~~Find half-blue limit (see NC2) with CH4 as fuel at 1 bar.~~

~~Notes~~

~~[1]Oxidizer will come from a bottle of the actual composition shown. Diluted fuel will come from a bottle of pure fuel mixed in line with a bottle of pure diluent.~~

~~[2]Balance is N_2, except tests IC13-15 and NC13-15.~~

~~[3]Inner jet flow rate will be such that the C2H4 (or CH4) mass flow rate is 1.5 mg/s, or a set point close to this. Outer jet flow rate will be ten times that required to stoichiometrically consume the inner jet reactant.~~

~~[4]Each test point does not imply a fresh chamber fill with N2. Assuming scrubbing capability of the CIR, the CO2 and H2O will be scrubbed after each run.~~

~~[5]Measurements include temperature, soot volume fraction, and color video unless otherwise specified. Continuously record the soot volume fraction. Download on demand.~~

5.4. s-Flame

The three-part test matrix below is designed to meet the complete success criteria, addressing all scientific objectives listed above.

*All experimental sets will address transient phenomenon, as the flame evolves from localized ignition towards "steady" behavior, corresponding to Objective (**A**). The flames evolve in a quasi-steady state manner (becoming history independent), after a short initial transient.*

*The rationale for this test matrix is to utilize various mixtures to assess both chemical and transport effects (including radiative) on flame behavior. Pure H_2 and pure CH_4 are utilized to assess kinetic mechanisms associated with each. Additionally, pure H_2 only produces H_2O as its radiative product, thereby isolating its radiative properties. Mixtures composed of both H_2 and CH_4 are used to examine their combined chemical and transport effects. Various inerts which affect characteristic flame temperature and transport (molecular and radiative), all in the same mole fractions, are utilized for comparison. C_2H_4 allows for the examination of a fuel with nominal unity Le number. Additionally, its characteristic sooting nature directly addresses our basic science objectives focusing on (**A**) spreading of flame sheets, (**B**) dual extinction states, and (**C**) flamefront instabilities.*

The fuel/inert mixtures in the REQUIRED experiment sets 1-2 include H_2/CH_4 mixtures (see subsets a, b, c) and H_2 and CH_4 as pure fuels (see subsets d, e) aimed at addressing chemical kinetic aspects. The inert mole fractions are all fixed at 55% for baseline comparison. As can be seen, the difference between sets 1 and 2 is the inert (N_2 versus He), which is chosen to assess transport (e.g. diffusive properties) effects on flame stability. For example, experimental set 2 is aimed at inducing the pulsating instability for Le > 1, corresponding to Objective ©. The fuel components and their relative compositions are the same for sets 1-2, with different inert species in balance; similarly, the ambient composition reflects the use of a different inert species in the fuel mixture. It is noted that the characteristic flame temperatures (which will affect the Zeldovich number, Ze) will be different for the two experimental sets affecting stability and extinction.

*Experiment sets 1-2 will also assess radiative extinction for high flow rates (see i, ii, iii under the flow rate category) and kinetic extinction for low flow rates (see iv and v under the flow rate category), corresponding to Objective (**B**). With regard to radiative extinction, mixture compositions of 25%H_2/20%CH_4, 20%H_2/25%CH_4, and 30%H_2/15%CH_4 have been shown in drop-tower experiments to be characterized by different radiative extinction times. These mixtures also eschew sooty ignition (due to strong H_2 presence), which can otherwise result in asymmetrically trapped soot that deteriorates flame sphericity. With respect to kinetic extinction, note that a step change from a higher flow rate to a lower one is needed because starting with a flow rate below the extinction limit would preclude flame establishment in the first place.*

*The HIGHLY DESIRED experiment sets 3-4 utilize C_2H_4 as fuel. With a nominal Le of unity with respect to air for this fuel, a baseline case (experiment set 3) for flame stretch and thermaldiffusive stability effects is established. The fuel and inert mole fractions for the C_2H_4/inert are varied to address different fuel concentration effects on sooting, which can impact Objectives (**A**) flame spread behavior, (**B**) extinction, and (**C**) flame stability. Soot will also enhance flame radiation. Since characteristic residence times will affect sooting tendencies, two flow rates are investigated for each mixture. Experiment set 4 replaces the inert, N_2, of set 3 with He, to better isolate Le>1 instabilities, corresponding to Objective (**C**), as well as examine extinction for characteristically higher flame temperatures.*

*The DESIRED experiment sets 5-6 examine the same fuel mixtures of the REQUIRED and HIGHLY DESIRED experiment sets, but with CO_2 as inert, including that for the ambient. N_2 and He are radiatively transparent gases; while CO_2 is an optically participating gas. While use of CO_2 should result in a characteristically lower flame temperature, the highly reabsorptive CO_2 species can minimize net radiative heat loss affecting flame dynamics and extinction. Objectives (**A**)-(**C**) are addressed by these experiments.*

The maximum duration of any test is **25**s.

Table 5.4.1

Test Matrix: Required Burner: spherical					
Exp Set	**Sub set**	**Fuel Mixture**	**Ambient**	**Flow rate (cc/s)**	**No. of runs**
1	(a)	25%H2/20%CH4/55%**N2**	21%O2/ 79%**N2**	(i) 5 (entire duration, 25s) (ii) 10 (entire duration, 25s) (iii) 15 (entire duration, 25s) (iv) 10 (5s)→2 (rest of duration) (v) 5 (5s) →2 (rest of duration)	5
	(b)			(i) through (v) as shown above	5
	(c)	20%H2/25%CH4/55%**N2**		(i) through (v) as shown above	5
	(d)	30%H2/15%CH4/55%**N2**		(x) 1 (entire duration, 25s) (y) 2 (entire duration, 25s) (z) 2 (5s) →0.5 (rest of duration)	3
	(e)	45%H2/55%**N2** 45%CH4/55%**N2**		(i) through (v) as shown in (a)	5
2	(a)	25%H_2/20%CH_4/55%**He**	21%O_2/ 79%**He**	(i) 5 (entire duration, 25s) (ii) 10 (entire duration, 25s) (iii) 15 (entire duration, 25s) (iv) 10 (5s) →2 (rest of duration) (v) 5 (5s) →2 (rest of duration)	5
	(b)	20%H_2/25%CH_4/55%**He**		(i) through (v) as shown above	5
	(c)	30%H_2/15%CH_4/55%**He**		(i) through (v) as shown above	5
	(d)	45%H_2/55%**He**		(x) 1 (entire duration, 25s) (y) 2 (entire duration, 25s) (z) 2 (5s) →0.5 (rest of duration)	3
	(e)	45%CH_4/55%**He**		(i) through (v) as shown in (a)	5
					46 total

Table 5.4.2

Test Matrix: Highly Desired Burner: spherical					
Exp Set	**Sub set**	**Fuel Mixture**	**Ambient**	**Flow rate (cc/s)**	**No. of runs**
3	(a)	20%C_2H_4/80%N_2	21%O2/ 79%**N2**	(i) 5 (entire duration, 25s) (ii) 10 (entire duration, 25s)	2
	(b)	25%C_2H_4/75%N_2		(i) and (ii) as shown above	2
	(c)	30%C_2H_4/70%N_2		(i) and (ii) as shown above	2
4	(a)	20%C_2H_4/80%**He**	21%O_2/ 79%**He**	(i) 5 (entire duration, 25s) (ii) 10 (entire duration, 25s)	2
	(b)	25%C_2H_4/75%**He**		(i) and (ii) as shown above	2
	(c)	30%C_2H_4/70%**He**		(i) and (ii) as shown above	2
					12 total

Table 5.4.3

Test Matrix: Desired Burner: spherical					
Exp Set	**Sub set**	**Fuel Mixture**	**Ambient**	**Flow rate (cc/s)**	**No. of runs**
5	(a)	25%H_2/20%CH_4/55%**CO_2**	21%O_2/ 79%**CO_2**	(i) 5 (entire duration, 25s) (ii) 10 (entire duration, 25s) (iii) 15 (entire duration, 25s) (iv) 10 (5s) →2 (rest of duration) (v) 5 (5s) →2 (rest of duration)	5
	(b)			(i) through (v) as shown above	5
	(c)	20%H_2/25%CH_4/55%**CO_2**		(i) through (v) as shown above	5
	(d)	30%H_2/15%CH_4/55%**CO_2**		(x) 1 (entire duration, 25s) (y) 2 (entire duration, 25s) (z) 2 (5s) →0.5 (rest of duration)	3
	(e)	45%H_2/55%**CO_2** 45%CH_4/55%**CO_2**		(i) through (v) as shown in (a)	5
6	(a)	20%C_2H_4/80%**CO_2**	21%O_2/ 79%**CO_2**	(i) 5 (entire duration, 25s) (ii) 10 (entire duration, 25s)	2
	(b)	25%C_2H_4/75%**CO_2**		(i) and (ii) as shown above	2
	(c)	30%C_2H_4/70%**CO_2**		(i) and (ii) as shown above	2
					29 total

5.5. BRE

The detailed test matrix is given in Tables 5.5.1 and 5.5.2. The estimated burning time of the required matrix is 37 minutes. The tests will emphasize measurements of two types of flames: quasi-steady burning and extinction. Tests will involve various fuel compositions and flow rates. This is necessary to map the range of conditions expected for condensed fuel burning. These tests support Objectives 1 – 3.

Part of the rationale for the text matrix is to consider conditions associated with NASA's planned manned flight activities: 21% O_2 in N_2 at 1.01 bar; 26.5% O_2 in N_2 at 0.703 bar; and 34% O_2 in N_2 at 0.565 bar.

Table 5.5.1.

Test Matrix: Required Burner: 25 and 50-mm BRE burners					
Test	**O2% (in N2)**	**Fluent (in N2)**	**Press. (bar)**	**Flow rate (sccm N2 basis)**	**Notes**
1	21%	C2H4	1.01	200	Test of system operation, diagnostics, and burning and extinction test. Use 25 mm burner. Use cabin air if possible for test 1.
2	40%	C2H4	1.01	200	
3	40%	C2H4	1.01	400	
4	40%	C2H4	1.01	100	
5	40%	75% C2H4	1.01	200	
6	40%	75% C2H4	1.01	400	
7	40%	75% C2H4	1.01	100	
8-13	34%	C2H4	0.565	varies	Repeat Tests 2–7 for different ambient
14-19	26.5%	C2H4	0.703	varies	Repeat Tests 2–7 for different ambient
20-25	21%	C2H4	1.01	varies	Repeat Tests 2–7 for different ambient
26-49	varies	CH4	varies	varies	Repeat Tests 2–25 for different fuel.
50-73	varies	C2H4	varies	varies	Repeat Tests 2–25 for 50 mm burner.

Notes
[1]Different fuel and oxidizer mole fractions may be specified during uplink.
[2]It may be necessary to ignite at different flow rates and/or gas compositions than those specified above.
[3]Assuming scrubbing capability is available, the CO_2 and H_2O will be scrubbed after some tests, and reactants replenished as needed.

Table 5.5.2.

Test Matrix: Desired Burner: 25 and 50-mm BRE burners					
Test	**Oxid. inert**	**Fluent (in N2)**	**Press. (bar)**	**Flow rate (sccm N2 basis)**	**Notes (which refer to tests in Table 5.5.1)**
74-97	N2	CH4	varies	varies	Repeat Tests 50–73 for different fuel.
98-103	N2	varies	2.02	varies	Repeat Tests 20–25 at different pressure.
104-114	CO2	varies	1.01	varies	Repeat Tests 2–7 and 20–25 for different ambient.

Notes
[1]Different fuel and oxidizer mole fractions may be specified during uplink.
[2]It may be necessary to ignite at different flow rates and/or gas compositions than those specified above.
[3]Assuming scrubbing capability is available, the CO_2 and H_2O will be scrubbed after some tests, and reactants replenished as needed.

6. Success Criteria

6.1. CLD Flame

Success of the Coflow Laminar Diffusion Flame experiment will be judged on meeting the stated experimental objectives by acquiring results that lead to the stated data end products. Three different levels of success – minimum, high, and complete success –

are defined. An additional level of success is defined as satisfying our overall project goals, which is not required for complete experimental success.

6.1.1. Minimum Success

Minimum success is defined to mean acquisition of sufficient scientific data from the experiment to perform a direct comparison with the numerical computations and publish at least one journal article. This minimal level of success may be achieved by obtaining basic information about the flame characteristics from the color images or UV images, possibly for a subset of the flame conditions outlined above. Meaningful subsets of the data might include data from a single fuel (methane or ethylene, but not both) or from either weak or sooting flames, but not both. Data would remain valuable for comparisons with computational models, albeit not as complete as would be desirable. For example, minimum success might come from obtaining data as follows:

1. Color images of nonsooting flames only (SDEP A1).
2. UV images of *OH** luminosity from nonsooting flames (towards SDEP A2).

This would provide data that would allow us to determine several of our science data end products including the following:

- Observation of lift-off heights as a function of dilution level (SDEP A4).
- Observation of extinction limits as a function of dilution level (SDEP A6).
- Observation of flame shape and size (SDEP A5).
- 2D images of *OH** concentrations (SDEP A2).
- Peak concentrations of *OH** as a function of fuel dilution (SDEP A3).

Similar “minimum success” subsets of data could be defined for sooting flames only, or datasets from one fuel only. In any of these cases, a paper could still be published on the limited results and their comparison to the computations.

6.1.2. High Success

High success is defined to mean acquisition of sufficient scientific data from the experiment to perform a direct comparison with the numerical computations and publish several journal articles. In addition to the information obtained for a minimum level of success, a high level of success may be achieved by obtaining more detailed information about the flame characteristics from UV images for species concentrations and from soot diagnostics for soot volume fraction (for example):

1. 2D images of soot laser extinction and associated reference images
2. 2D images of multi-color soot luminosity (from pyrometry data).

This would provide data that would allow us to determine several of our science data end products including the following:

- 2D images of soot volume fraction (SDEP B11).
- 2D images of soot temperatures (SDEP B9).

6.1.3. Complete Success

Complete success is defined to mean acquisition of all data related to the experimental objectives. In addition to the information obtained for a high level of success, a complete level of success may be achieved by obtaining complete information about the flame characteristics using the available diagnostic

techniques, including full information on temperatures, extinction and sooting tendencies across the full range of flow conditions:
1. Multi-color images of TFP data, including reference images.
2. Images of soot extinction representing the peak soot volume fraction, including reference images.
3. Soot luminosity images representing the peak soot temperature, including reference images.
This would provide data that would allow us to determine several of our science data end products including the following:
- Radial temperature profiles from TFP (SDEP A7 and B8).
- Combined temperature fields from soot pyrometry and TFP (SDEP A7 and B8 with B9).
- Peak soot volume fraction as a function of fuel dilution over the full range of flow velocities (SDEP B12).
- Peak temperature as a function of fuel dilution over the full range of flow velocities (SDEP A8 and B10).

6.2. E-FIELD Flames

6.2.1. Minimum Success

- Obtain V-I curve in quasi-steady conditions for undiluted methane fuel on either diameter of the gas jet burner or the co-flow burner
- Simultaneously capture color images of flame responding to electric field during V-I sweep

6.2.2. High Success

All of the above plus:
- Obtain V-I curve in quasi-steady conditions for both fuels (methane and ethylene) on one gas jet burner and the co-flow burner with a range of inert dilution of fuel
- Simultaneously capture flame images during voltage sweeps to allow measurement of liftoff height has a function of applied voltage
- Measure soot luminosity (radiometer measurement) as a function of applied voltage during VI sweeps and step changes
- Capture color images and soot luminosity (radiometer measurement) as a function of coflow velocity during the Electric Field Effects on Soot experiment.

6.2.3. Complete Success

All of the above plus:
- Demonstrate open loop control of flame near sooting and stability limits using ion current and luminosity as sensors by determining the decrease (or increase) in soot luminosity and by evaluating the extent to which stability limits can be extended using an electric field
- (Desired) Obtain thermal field information for the gas jet or coflow flame to visualize ion driven wind

6.3. Flame Design

6.3.1. Minimum Success

- Obtain color video of one normal and one inverse spherical flame that passes its sooting limit, passes its radiative extinction limit, and has a total burn time that exceeds 20 s.
- Obtain color video of three spherical flames of C_2H_4 flowing into air as a functions of time and *m*.

6.3.2. Complete Success (i.e., completion of required test matrix)

All of the above plus:

- Perform tests NS1 – 32 and IS1 – 32 or a similar set of spherical flame tests.
- Obtain soot inception limits and extinction limits for normal and inverse spherical flames as functions of Z_{st} and T_{ad}.
- Measure peak temperatures as a function of time and *m* for normal and inverse spherical flames.
- Measure temperature distributions at (or near) the sooting and extinction limits of normal and inverse spherical flames.
- Measure soot volume fraction profiles for normal and inverse spherical diffusion flames at low and high Z_{st}.

6.3.3. Superior Success (desired)

All of the above plus:

- Obtain color video, soot inception limits, and extinction limits of normal and inverse coflow flames at quasi-steady conditions as a function of *m*, Z_{st} and T_{ad}.
- Obtain soot inception limits and extinction limits with CO_2 diluent as functions of Z_{st} and T_{ad} for normal and inverse spherical and coflow flames.
- Obtain soot inception limits and extinction limits for C_2H_4 as functions of Z_{st} and T_{ad} for normal and inverse spherical and coflow flames at pressures of 0.2 and 0.5 atm.
- Obtain soot inception limits and extinction limits for CH_4 as functions of Z_{st} and T_{ad} for normal and inverse spherical and coflow flames.

6.4. s-Flame

Success of the s-Flame Experiment will be judged on meeting the stated science objectives. Three different levels, minimum, high, and complete success, are defined below.

6.4.1. Minimum Success

Minimum success is defined to mean sufficient scientific data return from the experiment to perform a direct comparison with the numerical flame simulation and publish a single archival journal article. This minimal level of success may be achieved by obtaining (for example):

1. Observations of transient flame phenomena leading toward steady state flames for 1 CH_4 case and 1 C_2H_4 case. Such observations must include, at a minimum,

the flow and boundary condition measurements, flame temperature data and image sequences from at least two orthogonal imaging systems; or

2. Observations of flame extinction at both low and high system Damkohler number for 1 case. Such observations must include, at a minimum, the flow and boundary condition measurements, flame temperature data and image sequences from at least two orthogonal imaging systems; or

3. Observations of spherical soot formation in 1 C_2H_4 case. Such observations must include, at a minimum, the flow and boundary condition measurements, flame temperature data and image sequences from at least two orthogonal imaging systems.

6.4.2. High Success

High success is defined to mean sufficient scientific data return from the experiment to perform direct comparison with the numerical flame simulation resulting in multiple archival journal publications, but less return that defined for complete success. This high level of success may be achieved by obtaining (for example):

1. Observations of at least two instances of flame front instabilities including at least one hydrocarbon fuel. Such observations must include, at a minimum, the flow and boundary condition measurements, and data quantifying the flame front oscillations from image sequences from at least two of the three imaging systems and from the radiometer instrument; or

2. Combinations or extensions (in terms of number of mixture ratios for a single hydrocarbon fuel or number of hydrocarbon fuels) of at least two of items 1 through 4 defined for minimum success.

6.4.3. Complete Success

Complete Success is defined as meeting all of the experiment objectives, including as a minimum:

1. Observations of transient flame phenomena leading toward steady state flames for at least three different mixture ratios of each of two hydrocarbon fuels and two diluents. Such observations must include, at a minimum, the flow and boundary condition measurements, flame temperature data, image sequences from two orthogonal imaging systems, and radiometer data; and

2. Observations of flame extinction at both low and high system Damkohler number for at least three different mixture ratios of each of two hydrocarbon fuels and two diluents. Such observations must include, at a minimum, the flow and boundary condition measurements, flame temperature data, image sequences from two orthogonal imaging systems, and radiometer data; and

3. Observations of at least two instances of flame front instabilities each including at least one hydrocarbon fuel. Such observations must include, at a minimum, the flow and boundary condition measurements, and data quantifying the flame front oscillations from image sequences from at least two orthogonal imaging systems and from the radiometer instrument; and

4. Observations of soot formation. Such observations must include the flow and boundary condition measurements, flame temperature data, image sequences from all imaging systems, temperature data, and radiometer data.

6.5. BRE

6.5.1. Minimum Success

- Obtain color video, burner surface temperature, and burner heat flux for two C_2H_4 flames that burn for at least 20 s and then extinguish.

6.5.2. High Success

All of the above plus:

- Obtain a flammability map for C_2H_4.

6.5.3. Complete Success

All of the above plus:

- Obtain a flammability map for CH_4.
- Measure peak temperatures (using filament and/or soot pyrometry) as a function of time for at least 5 flames.
- Measure temperature distributions (using filament and/or soot pyrometry) at or near quasi-steady conditions for at least 5 flames.
- Measure temperature distributions (using filament pyrometry) near the extinction limit for at least 5 flames.
- Measure soot volume fraction profiles at (or near) quasi-steady conditions and near the extinction limit for at least 5 flames.

6.5.4. Superior Success

All of the above plus:

- Complete the desired parts of the test matrix.

APPENDICES

There are no requirements in the appendices; they are only provided for design reference.

A: Spherical Burner Design Reference
B: Coflow Burner Design Reference
C: Electric Field Design Reference
D: BRE Burner Design Reference
E. BRE Radiometer Design Reference

Appendix A: Spherical Burner Design Reference

Both the s-Flame and Flame Design research teams have significant experience with the manufacture of porous spherical burners from sintered metal. Both have relied upon an approach of fabricating the burners in lots and then testing them to identify the ones that best produce flames which are spherical and concentric with the burner. Given buoyancy's role, this verification testing has been conducted in the 2.2s Drop Tower or in normal gravity under conditions where buoyant effects have been reduced (but not eliminated).

s-Flame

The s-Flame burners are described in general terms here, but note that a proprietary process was used for manufacturing the small burners.

Sphere design: *Sintered porous metal apparently works best, rather than porous ceramic or hollow spheres with holes created by EDM. The spheres are "solid" with sintered grains except where the feed tube inserts. This was done by incorporating a feed tube during pressing/heating of the mold. This "tunnel" was then tapped for the feed tube to be screwed into. The depth at which the feed tube is inserted into the 'tunnel' is a key parameter, as there is a small volume, or open cavity, at the 'center' of the burner, that affects flow uniformity. The depth of the feed tube penetration was optimized via modeling with CFD. If it is possible to press the mold uniformly (radially), rather than in 2 hemispheres (as done by the company), that should work best.*

Sphere material:*- sintered bronze (and possibly other materials)*

Sphere sizes: *at least 1/8" to ½" in diameter. Commercially, >1/2" diameters work best. Smaller sizes need to be manufactured at Princeton to work well.*

Sphere manufacturer: *Custom-fabricated spheres from Princeton are believed to give the best results. GKN Sintered Metals has manufactured the spheres with a provided spec and protocol.*

Tube diameter: *These sizes of the feed tubes depended on the burner sizes. For the 1/4" and 1/2" diameter porous burners, the tubing used are 0.025" O.D./0.017" I.D. and 0.058" O.D./0.042" I.D., respectively.*

Tube attachment: *The feed tubes are threaded, and the spheres are tapped, to establish the supply connection. There is no sealant used for the threaded joints. Since the tube is inserted almost to the center, s-Flame rarely has leaking effects.*

Burner verification: *Flame shape for inverse diffusion flames in a micro-buoyancy chamber is the standard test for s-Flame. There is a big difference between diffusion flames and premixed flames, as the issuing velocity is at least an order of magnitude less for the diffusion flames.*

Successful fabrication: *For the commercial spheres, perhaps 30% are acceptable. Sometimes, only 1 in 10 work out.*

Thermocouple attachment: *The s-Flame researchers measure the burner surface temperature using a K type thermocouple which is simply tied to the feed tube with the junction contacting the base of the sphere.*

Flame Design

The Flame Design team currently has two spherical burners, described below, which meet their requirements for flame shape.

Burner numbers: *8 and 11*
Sphere manufacturer: *Chand Associates, Worcester, MA, 508-791-9549 (see below)*
Sphere and tube material: *stainless steel*
Sphere pore size: *10 micron, sintered*
Sphere outside diameter: *6.35 mm (0.25 inch)*
Sphere hole diameter (to center): *1.59 mm (1/16 inch)*
Tube diameter: *1.59 mm (1/16 inch)*
Tube attachment method: *epoxy*
Tubes epoxied by: *Chip Redding (#8) and John Napier (#11), NASA Glenn*

The porous spheres manufactured for Flame Design are not available as a standard product as described in the e-mail below.

From: Sales [mailto:sales@chandeisenmann.com]
Sent: Tuesday, October 21, 2008 6:41 PM
To: Stocker, Dennis P. (GRC-REC0)
Subject: Porous Spheres?

Good Afternoon Dennis;

Thank you for inquiring about the porous sintered metal products that we manufacture. We do not make spherical parts as a regular production item. However, many years ago, we designed one special pressing tool to make a pilot run of 0.250" OD spherical parts for NASA Glenn.

We could make try to make porous parts, but this would be a development project.

Sincerely,

Mark Eisenmann

Chand Eisenmann Metallurgical
258 Spielman Highway
Burlington, CT 06013 USA

Telephone: 860-675-5000
Fax: 860-675-0521
Email: me@chandeisenmann.com
Website: www.chandeisenmann.com

Appendix B: Coflow Burner Design Reference

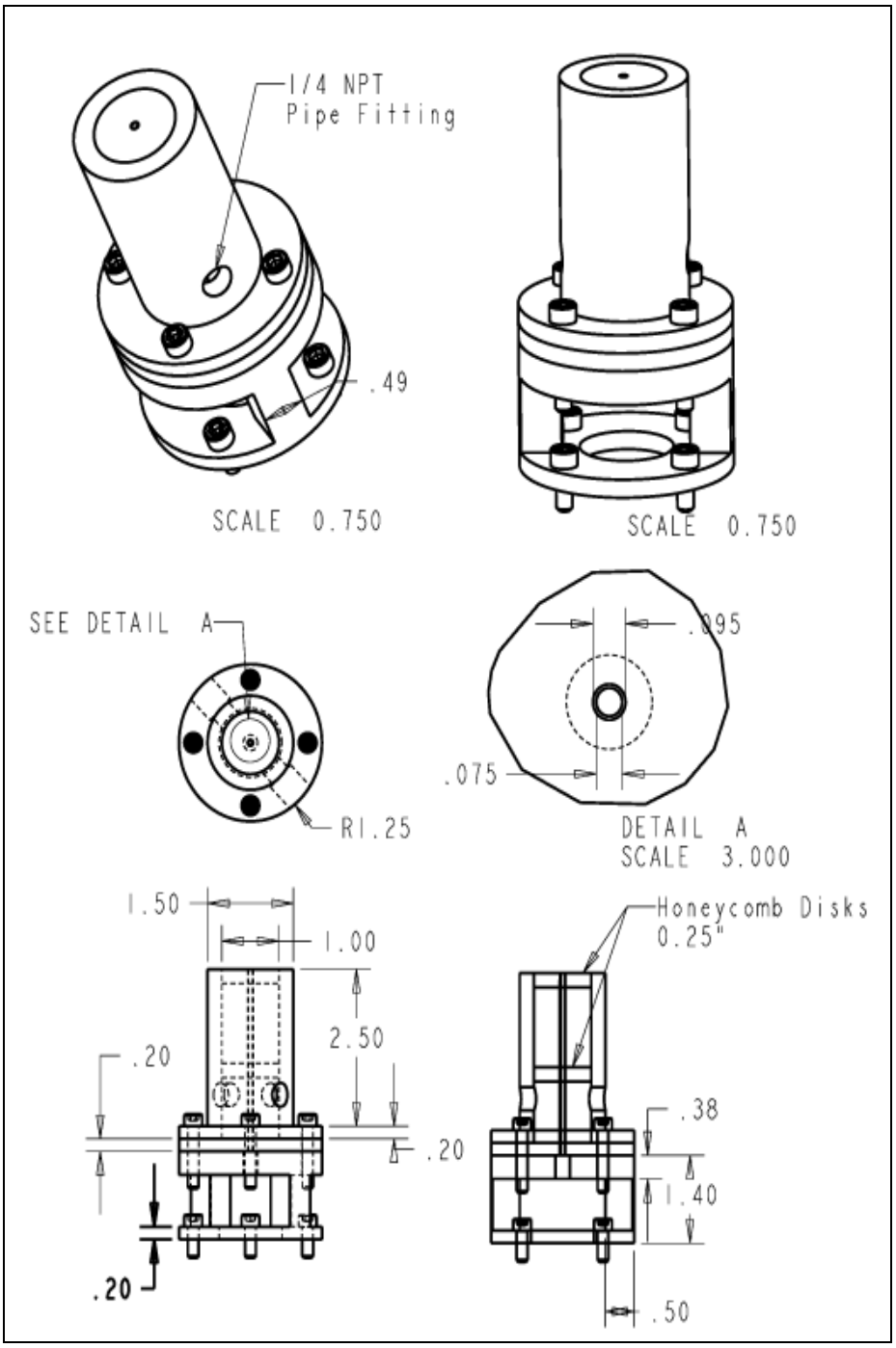

Figures 2 and 3. *Schematic and photo of a burner developed by the PI team for CLD Flame for their ground-based experiments. The depicted schematic incorporates a suggested revision to minimize the volume of the fuel between the flow controller and the burner exit. Dimensions are in inches. Note the use of the honeycomb to create a plug flow (i.e., flat velocity profile) for the coflow. The central fuel tube has a length/diameter ratio of roughly 40 in order to develop a parabolic flow profile. The normal-gravity flames produced by this burner are typically less than 2.5 cm tall, with a maximum 1g diameter of about 0.6 cm.*

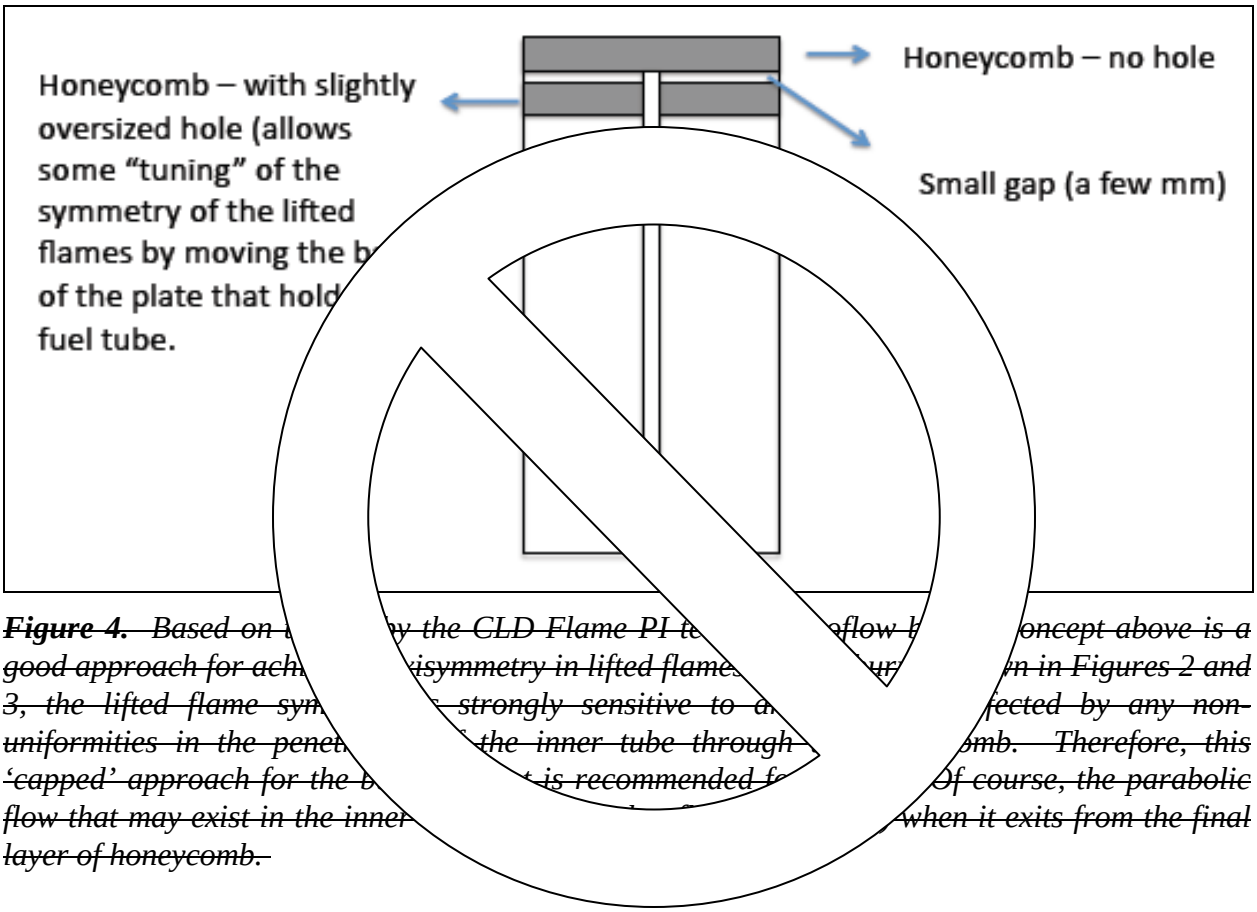

~~***Figure 4.*** *Based on y the CLD Flame PI te oflow b oncept above is a good approach for ach isymmetry in lifted flame ur n in Figures 2 and 3, the lifted flame sym strongly sensitive to a fected by any non-uniformities in the penet the inner tube through mb. Therefore, this 'capped' approach for the b t is recommended fo Of course, the parabolic flow that may exist in the inner when it exits from the final layer of honeycomb.*~~

Appendix C: Electric Field Design Reference

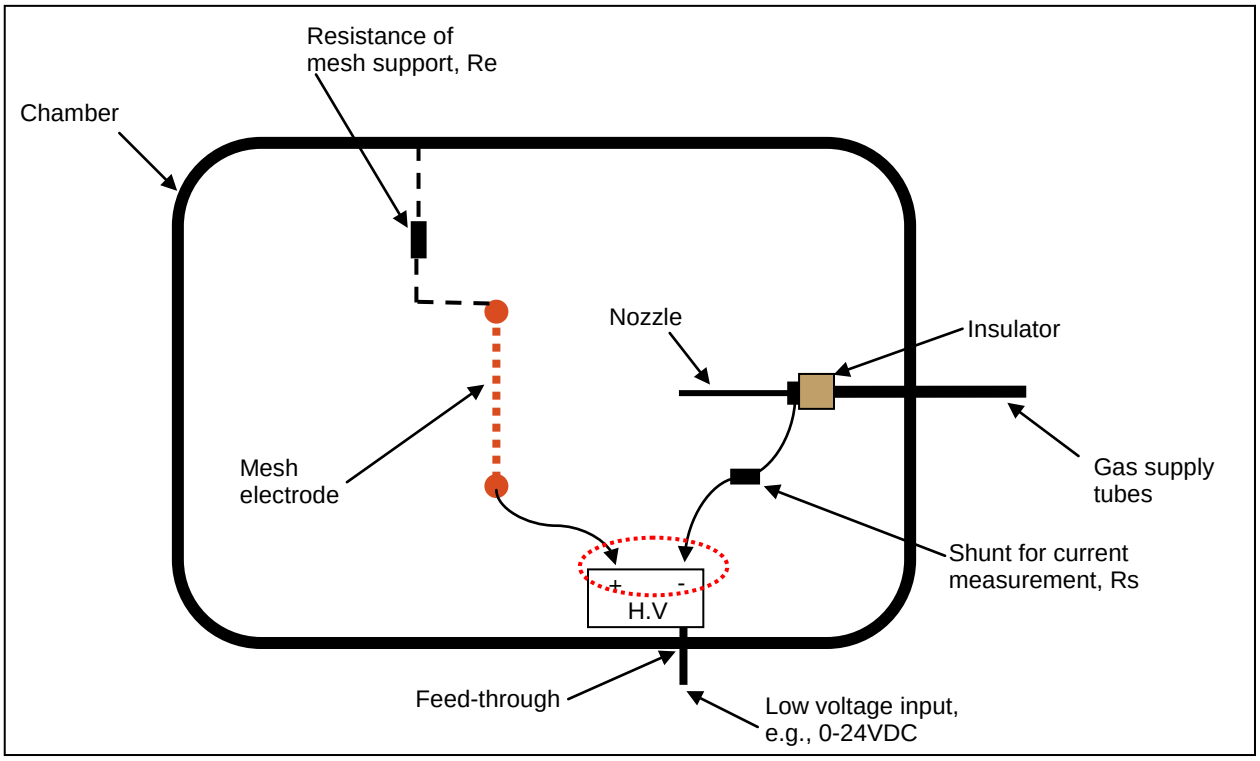

Figure 5. *Electric field schematic.*

An effective resistance of 200 giga-ohms is recommended for the insulation between the mesh electrode and the chamber. With that resistance, leaking current at 10 kV would be 0.05 mA, which is sufficiently small in comparison with estimated flame current of ~ 1 mA.

AP-19

Polarity Reversing Configurations of UltraVolt HVPSs

In some electronics applications, a particular bias voltage may have to range from a positive voltage to a negative voltage or vice versa. The conventional solution is to utilize a high-voltage relay to reverse the polarity. However, this approach introduces a mechanical element to the system, which dramatically reduces the MTBF of the HVPS sub-system. This application note is presented as an illustration of a simple solution for low-current and electrostatic-bias applications. For higher current applications, contact UltraVolt's customer service department.

The simplest form of electronic polarity reversing is accomplished by using a positive supply and a negative supply, joined together through a pair of series resistors:

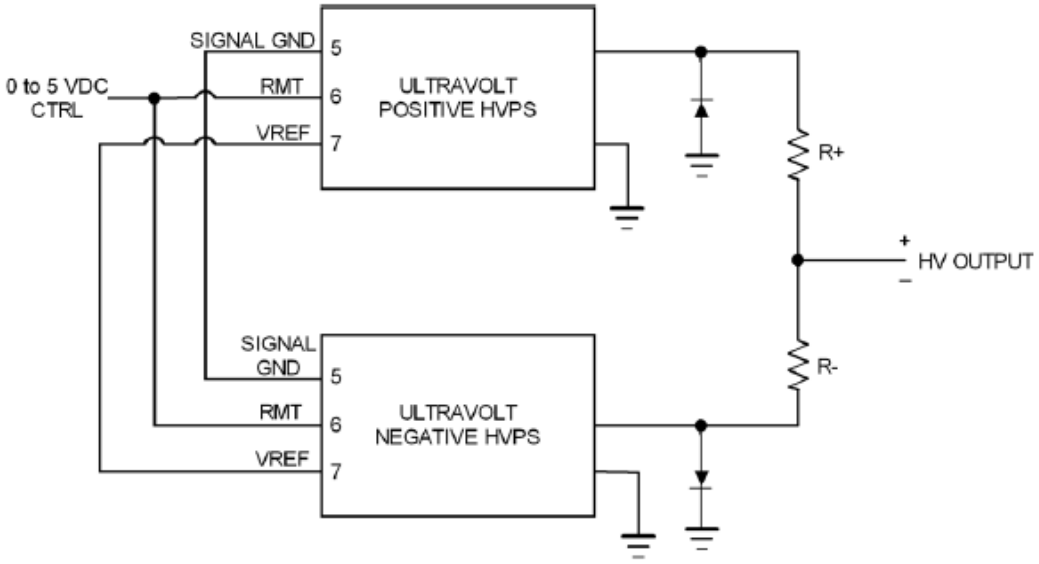

This configuration provides seamless control from 1/2 of the positive supply's maximum output voltage to 0 VDC to 1/2 of the negative supply's maximum output voltage. For example, an UltraVolt 4A12-P4 and 4A12-N4 combination would be adjustable from +2kV to -2kV. The supplies could be of the same voltage capability or could be selected to provide a limited range in one polarity. The resistors can be equal in value to provide an equal voltage range at either polarity, or they can be selected to limit the range of one polarity.

The diodes on the output of each HVPS are provided to sink the reverse current from the HVPS of the opposite polarity before it can reverse bias the circuitry inside the HVPS. These diodes should be rated a minimum of 150% of the maximum voltage, i.e., 6kV diodes when used with a 4kV circuit.

The HVPS control has an initial gain error of ±1.0%. When tying the control pins of two HVPS together and driving them with a single signal, the error becomes ±2.0%. This error can be minimized two ways. The first way is to use two independent control signals from two pots or two dacs, corrected to eliminate the error. The second way is to use a single control signal through two 'calibration' potentiometers, one for each HVPS. The potentiometers can be conventional or digitally controlled. These methods are effective whether the goal is 'factory' calibration during initial manufacturing or "recalibration" on each system power-up.

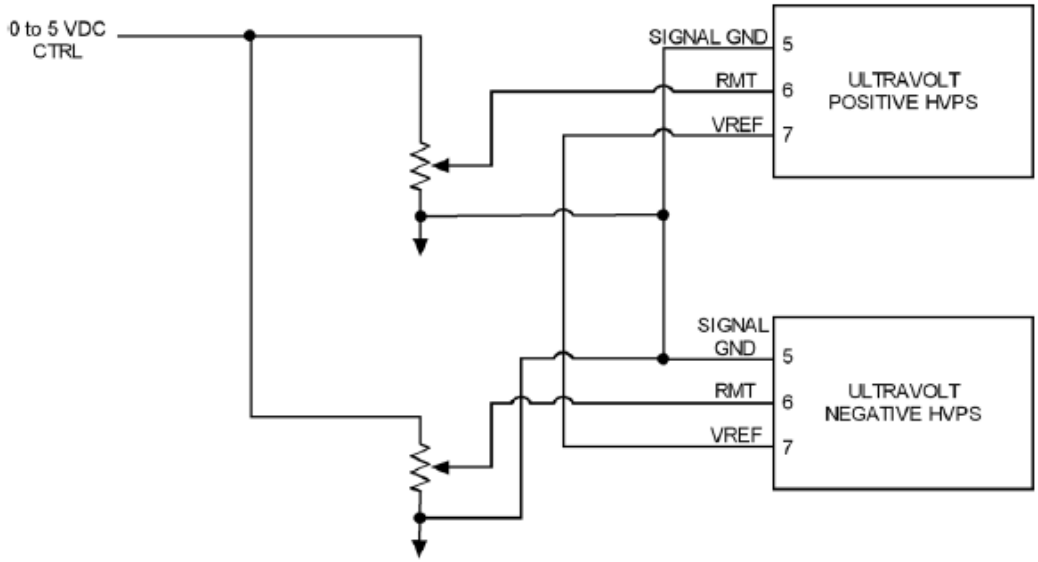

In low-noise systems the UltraVolt HVPS is normally ordered with the -F Ripple Stripper® Output Filter option and with the -M Mu-Metal shielding option. Since the output resistors isolate the HVPS from the load with a high impedance, this impedance can be used as an additional filter element with the addition of a single capacitor and resistor.

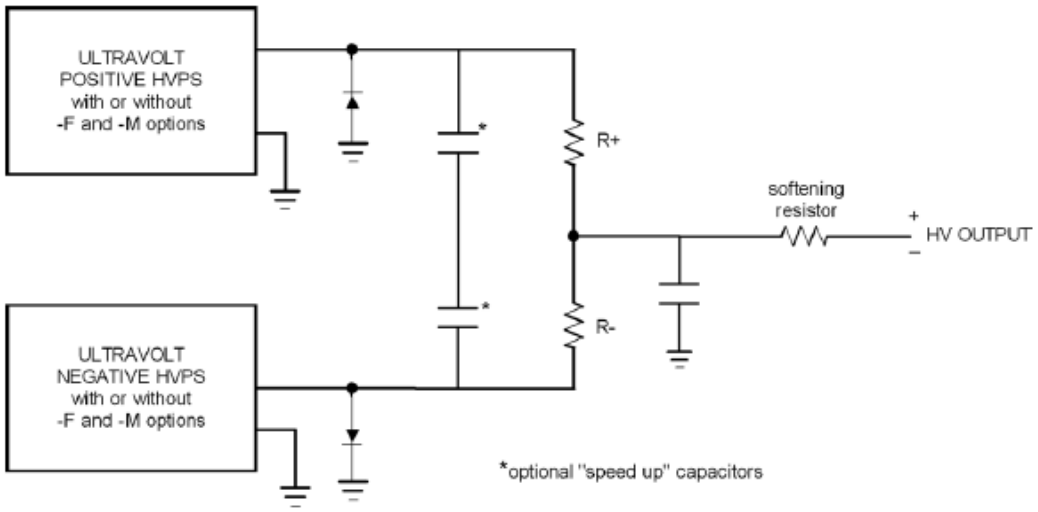

©1992-2009 UltraVolt, Inc.

Appendix D: BRE Burner Design Reference

This appendix describes the design of BRE burners developed by the BRE PI team. The subsequent text does discuss draft science requirements, but none of the appendices - including this one - should be used as a source of requirements.

The burners shall involve round porous frits through which gaseous fuel is fed. These frits shall have diameters of 25 and 50 mm. Each burner shall contain two-heat flux meters flush with the frit surface and facing outward. The PI team has extensive experience with the design and use of these burners. They can either advise NASA on the design of the flight burners or provide these. The burners shall be positioned such that the burner axis is coincident with the CIR chamber axis within ±2 mm (i.e., along its length) and orthogonal to the CIR chamber window axes. The plane of the CIR chamber window centers shall be 10±2 mm downstream of (i.e., above) the burner outlet.

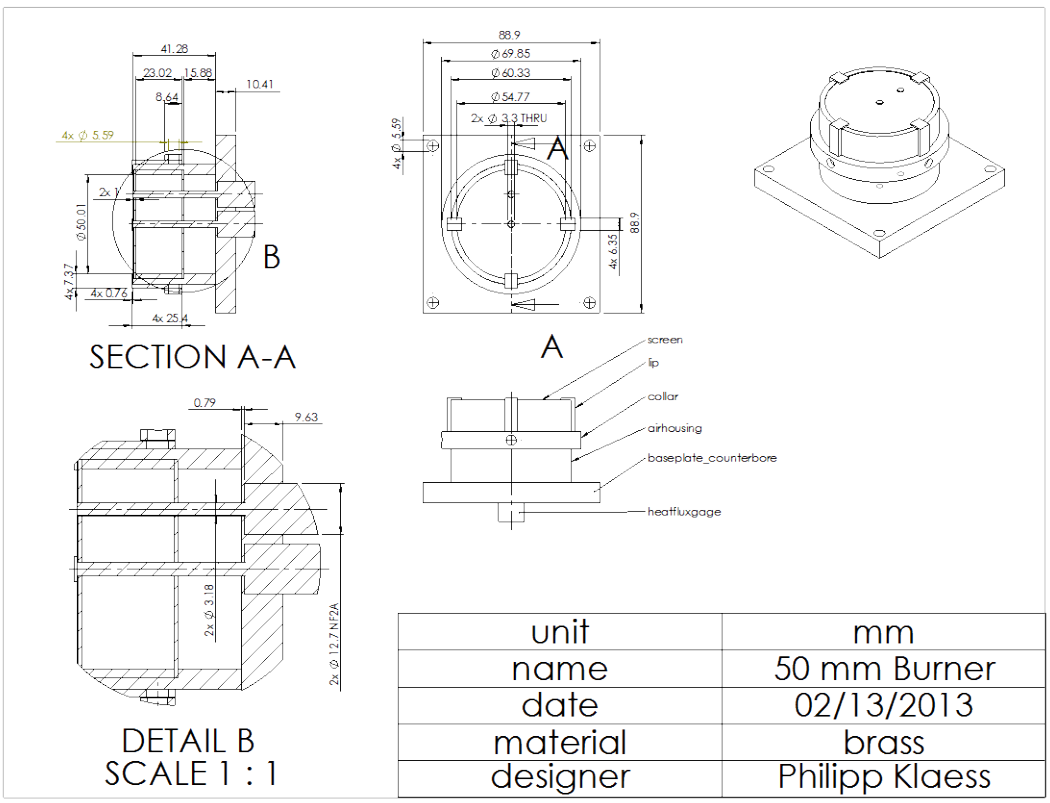

Figure 6. *50 mm burner*

Details of both burners are shown in Figures 6 and 7. The burners shall have a cylindrical configuration, consisting of a fuel duct of 25 or 50 mm in diameter. The burner housing shall sit on a base plate that provides an interface to install into the CIR chamber. The burners shall involve a cylindrical porous region through which gaseous fuel is fed and evenly distributed.

Glass beads of 3/16" diameter (50 mm burner) and 1/8" (25 mm burner) diameter shall provide this porous matrix for the fuel flow in the burner. They shall be held between two perforated brass screens: one at the top of burner as the operating face and the other one leveled 1" below it, sitting on the step provided by the burner housing. (The brass meshed screen information is

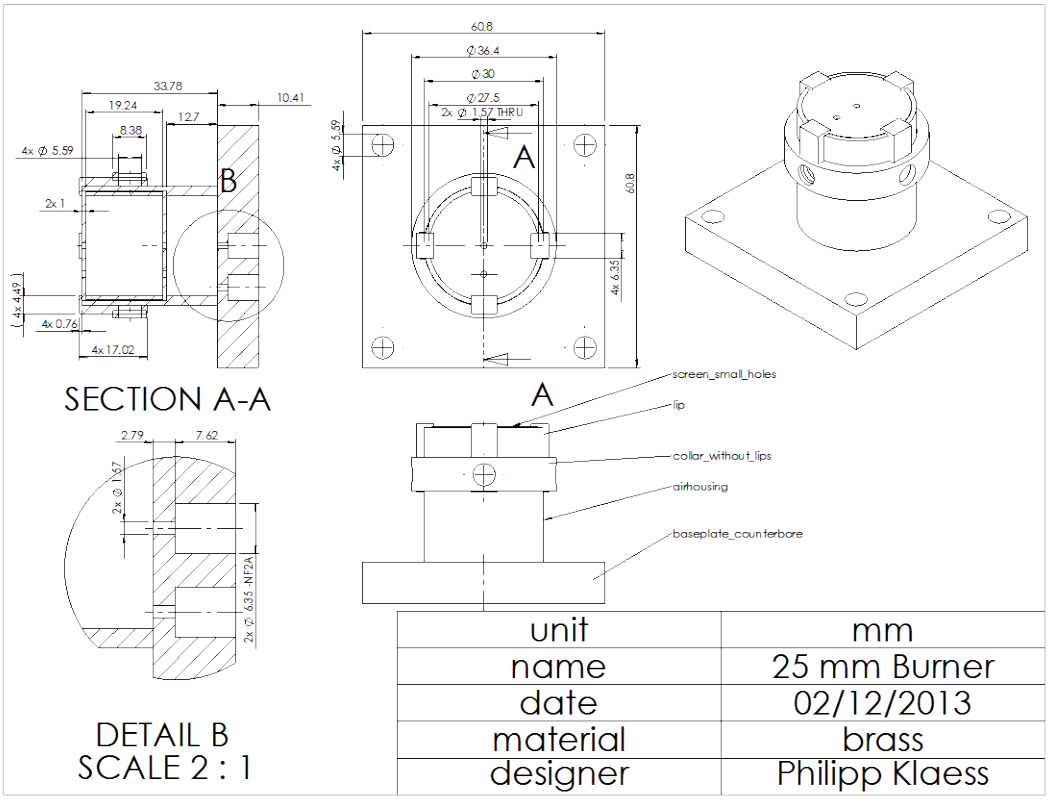

Figure 7. *25 mm burner*

provided as following: McMaster-Carr Part# 9360T13 Brass Perforated Screen 0.016" thick, 0.016" staggered hole diameter, 22% open area and 0.035" center to center spacing.) They shall be separated by a cylindrical spacer of 1" in height. The brass screen shall be 0.016" thick with staggered holes of 0.016" in diameter. Each burner shall contain two-heat flux meters flush with the operating surface and facing outward. In the case of 50 mm diameter burner, the two heat flux meters shall be positioned at the center and 15 mm from the center. For 25 mm diameter, they shall be positioned at the center and 10 mm from the center. At these two positions, two accommodating holes shall be drilled at the base plate with threads to integrate the heat flux gages. The stem of the sensor goes all the way through the glass bead layers to the surface. Thus the two brass screens shall also be drilled with the diameter of the stem to let the gages get through. The fuel port shall be located at the side of the burner close to the base plate. A ¼" Swagelok fitting shall provide the connection with the fuel hose. A collar shall hold the surface screen to its position by four claws. The claws shall be minimized in the size to eliminate its effect on the flame. The collar shall be fixed to the burner by four set-screws.

Heat Flux Gages

Drawings of the heat flux gages are taken from Medtherm, the supplier. They are shown in Figures 8 and 9. The heat flux gages used in the 50 mm burner has a stem shape sensor of 1/8" diameter. Cooling water may not be required. The thermocouple at the senor surface is required. The 25 mm diameter burner requires the heat flux gages to be smaller in size. A 1/16th inch diameter sensor is required.

The models used in the ground experiment are from Medtherm. The 1/8" model for 50 mm burner is 8-1.8-10SB-4-0-36-20425AT. It has 1/8" diameter, 1.8" long stem. The cylindrical body has ½-20 NF-2A thread to integrate with the burner and an O-ring to prevent the gas leakage from the interface. It is equipped with a T type thermocouple to measure the surface temperature at the sensor. Other dimensions and technical details are included in the attached schematics.

The 1/16" model for 25 mm burner is 4-10SB-1.4-0.43-4-36-21919T. It has 1/16" diameter, 1.4" long stem. The cylindrical body has ¼ -28 NF-2A thread to integrate with the burner. It is also equipped with a T type thermocouple to measure the surface temperature at the sensor. The O-ring is not included in this model but it is recommended to have one to help the sealing. Other dimensions and technical details are included in the attached schematics

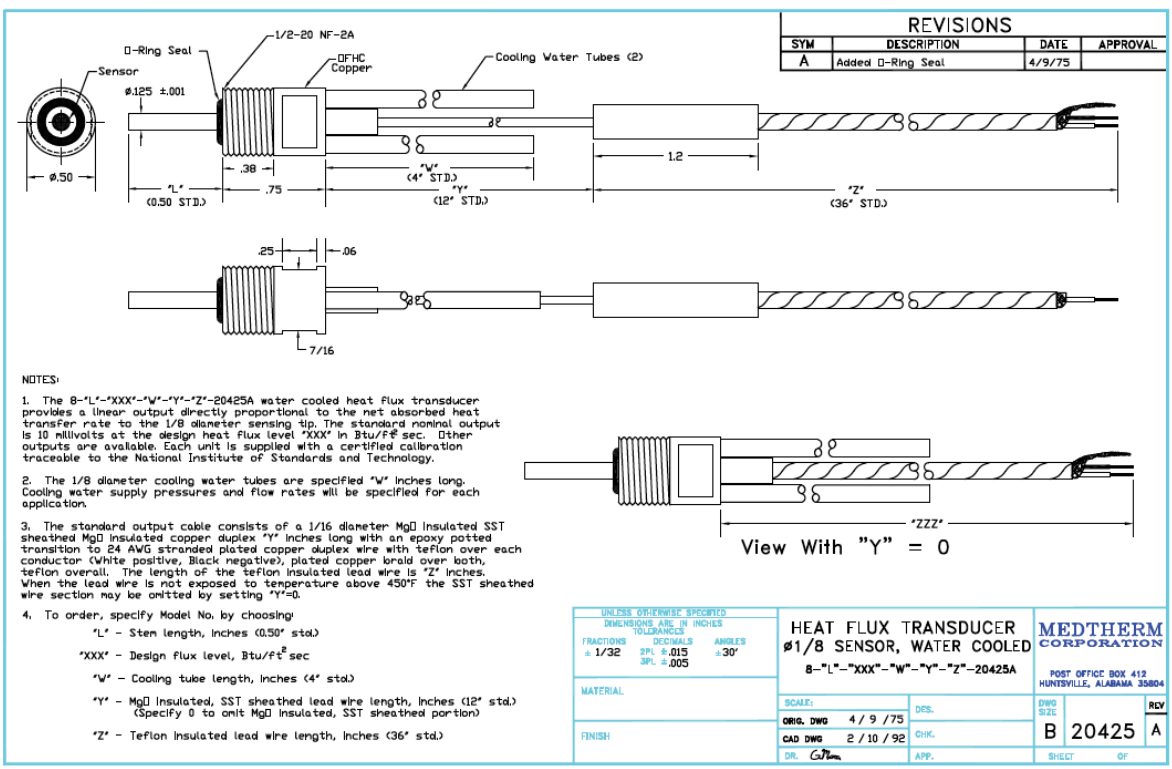

Figure 8. *1/8th inch heat flux sensor*

The recommended Medtherm sensors are from their 64 Series: Heat Flux Transducers and Infrared Radiometers for the Direct Measurement of Heat Transfer Rates. We used the Schmidt-Boelter gage that uses a multi-junction thermopile. This is important, as we want the

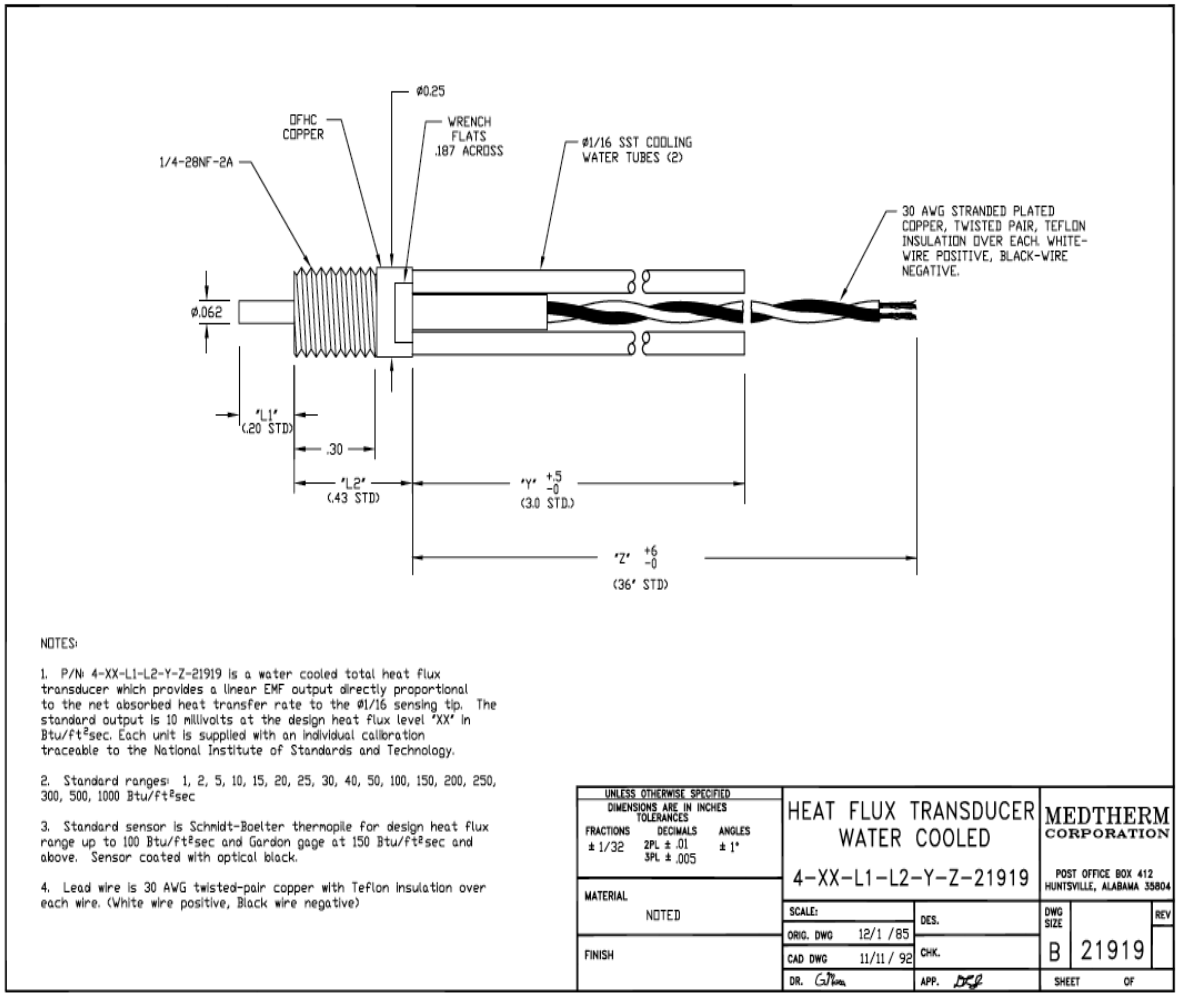

Figure 9. *1/16th inch heat flux sensor*

surface of the sensor to be of a uniform temperature (unlike the alternative Gardon gage). A thermocouple also measures the temperature of the sensor. There is no transmitting window or aperture. The Medtherm thermopile gage has an absorptance of 0.95 over a spectral range of 0.6 to 15.0 μm. Currently we are using 10 mV output at a full range of 100 kW/m^2. Recent drop tests indicate an initial heat flux of about 50 kW/m^2 at ignition and then dropping to values of generally about 5 kW/m^2. As the Medtherm sensors can easily over range by 150%, within their linear calibration, we can exceed the 10 mV limit. The sensors have reported maximum non-linearity of +/- 2 % of full range and a repeatability of +/- ½ %. They are calibrated with an uncertainty of +/- 3 %. The maximum operating temperature is 400 ºF (204ºC). The sensor has a response time of less than 250 ms. For ground-based operation water-cooling is desired. However, the sensor thermocouple specification is sufficient for operation without water, provided the sensor does not exceed about 200 ºC.

Although 65-75 ºC circulating water prevents possible water condensation and sensor overheating, there is no requirement for circulating water for the proposed flight hardware.

Tests by the PI team have found that water condensation and sensor overheating are unlikely for the proposed flight test matrix.

Surface Temperature Measurement

The temperature of the brass screen should be measured as the burner surface temperature. To represent its distribution throughout the area, the thermocouples should be placed at two positions, close to where the heat flux sensors are located. In the ground experiment, two K-type 0.01" diameter bare wire thermocouples are used. They are sewed into the screen. Some tape is applied at the collar of the burner to avoid the contact between the wire and the metal surface. The contact of metal and wire would introduce disturbances to the measurement. A bonded thermocouple to the brass screen, with insulated leads away from the measuring junction, is desired. We have not found a suitable way to do this yet.

Burner Detailed Drawings
50 mm Burner

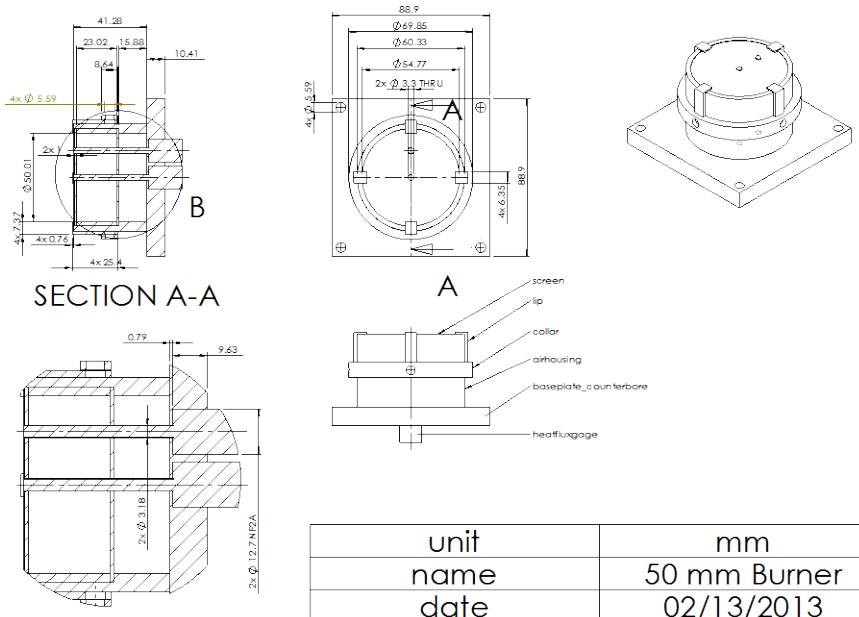

DETAIL B
SCALE 1 : 1

unit	mm
name	50 mm Burner
date	02/13/2013
material	brass
designer	Philipp Klaess

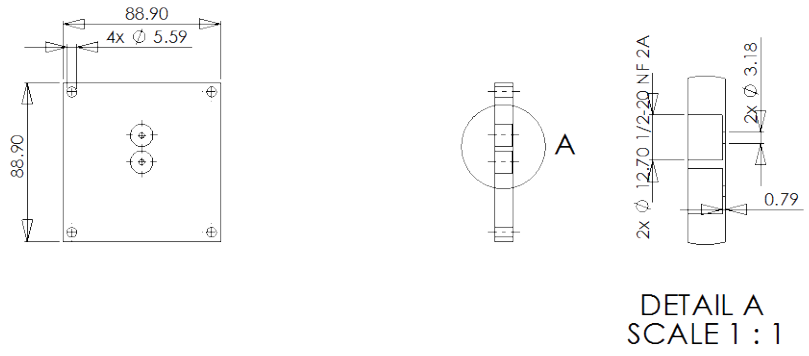

DETAIL A
SCALE 1 : 1

unit	mm
name	baseplate_thread
date	02/11/2013
material	brass
designer	Philipp Klaess

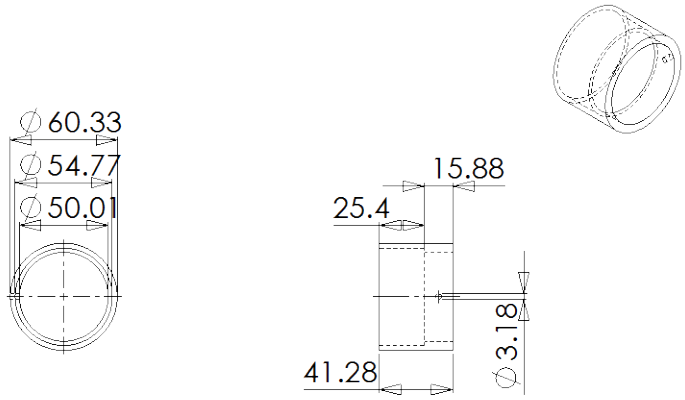

unit	mm
name	airhousing
date	12/13/2012
material	brass
designer	Philipp Klaess

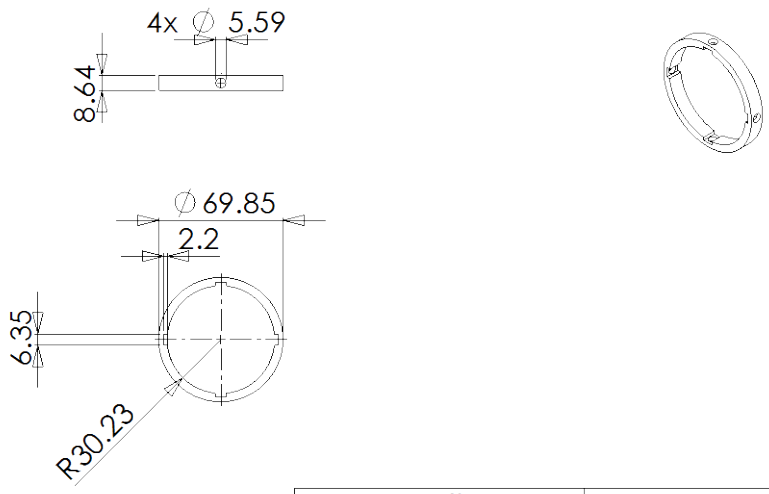

unit	mm
name	collar
date	12/15/2013
material	brass
designer	Philipp Klaess

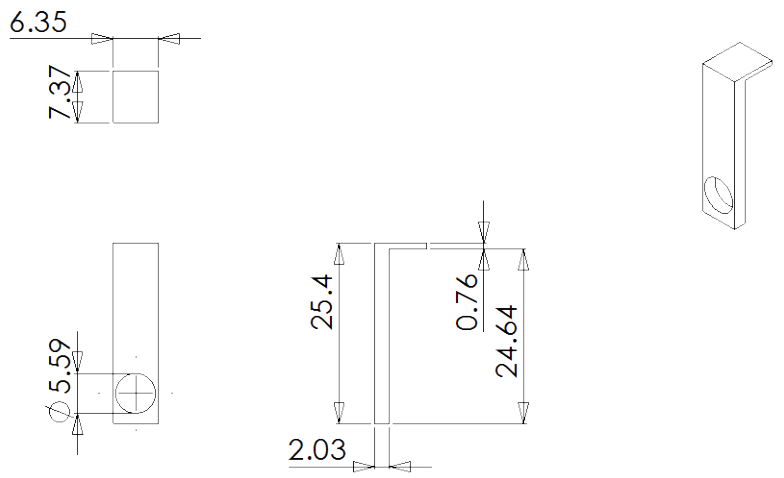

unit	mm
name	lip
date	12/20/2012
material	brass
designer	Philipp Klaess

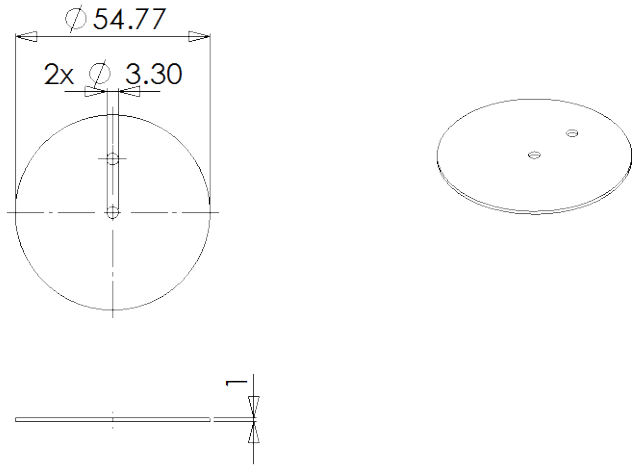

unit	mm
name	screen
date	12/15/2012
material	brass
designer	Philipp Klaess

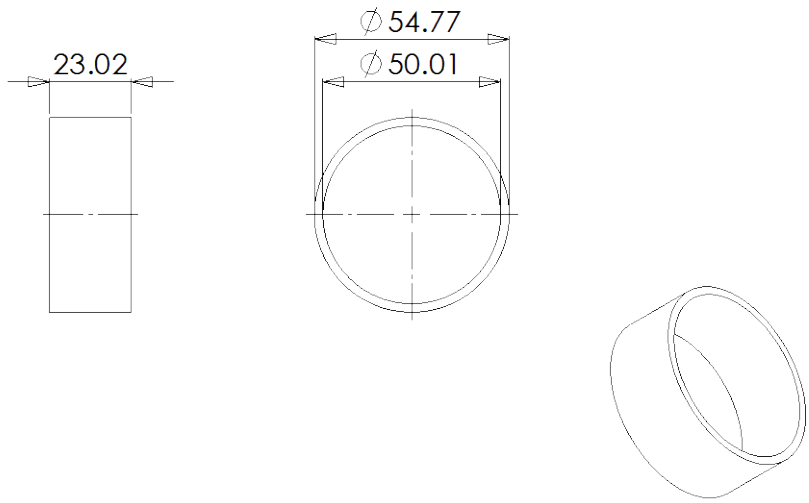

unit	mm
name	spacer
date	12/13/2012
material	brass
designer	Philipp Klaess

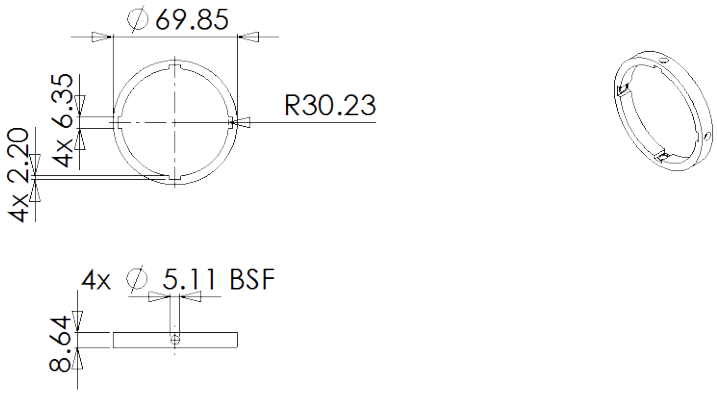

PROPRIETARY AND CONFIDENTIAL
THE INFORMATION CONTAINED IN THIS DRAWING IS THE SOLE PROPERTY OF <INSERT COMPANY NAME HERE>. ANY REPRODUCTION IN PART OR AS A WHOLE WITHOUT THE WRITTEN PERMISSION OF <INSERT COMPANY NAME HERE> IS PROHIBITED.

NEXT ASSY | USED ON
APPLICATION

DIMENSIONS ARE IN INCHES
TOLERANCES:
FRACTIONAL ±
ANGULAR: MACH ± BEND ±
TWO PLACE DECIMAL ±
THREE PLACE DECIMAL ±

MATERIAL —
FINISH —
DO NOT SCALE DRAWING

	NAME	DATE
DRAWN		
CHECKED		
ENG APPR.		
MFG APPR.		
Q.A.		

COMMENTS:

<COMPANY NAME>

SIZE A | DWG. NO. | REV
SCALE: 1:2 | WEIGHT: | SHEET 1 OF 1

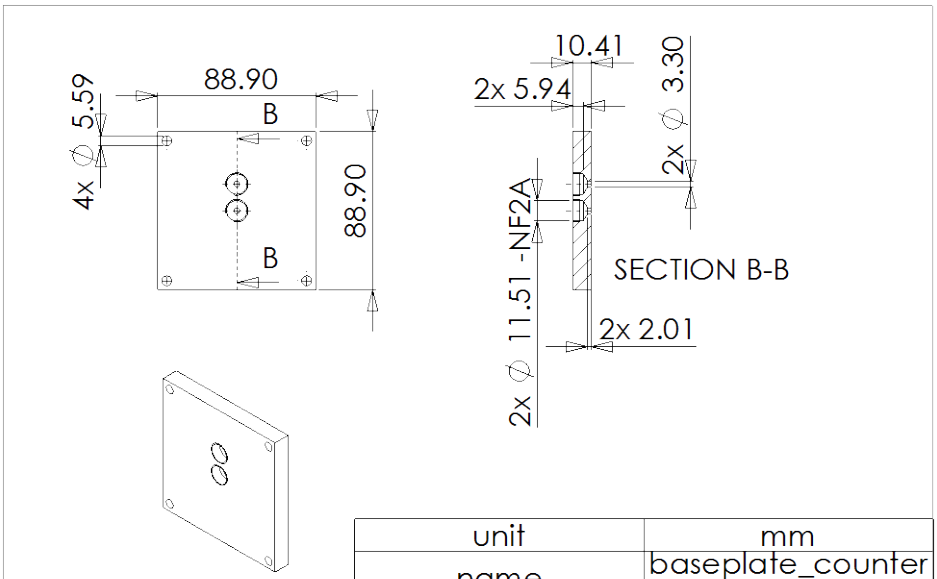

unit	mm
name	baseplate_counter bore
date	02/14/2013
material	brass
designer	Philipp Klaess

25 mm Burner

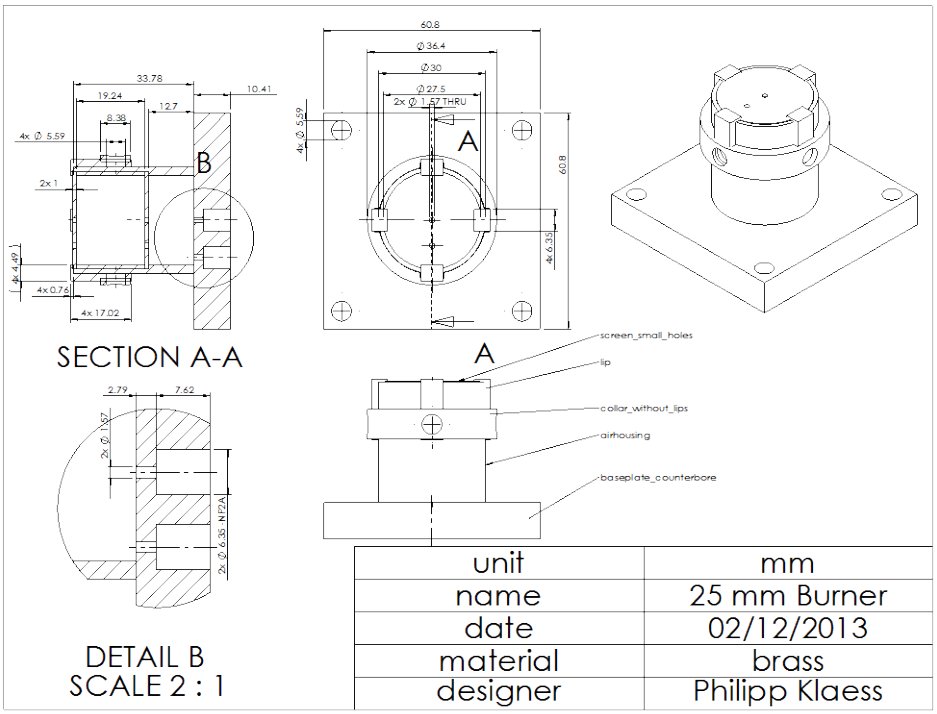

unit	mm
name	25 mm Burner
date	02/12/2013
material	brass
designer	Philipp Klaess

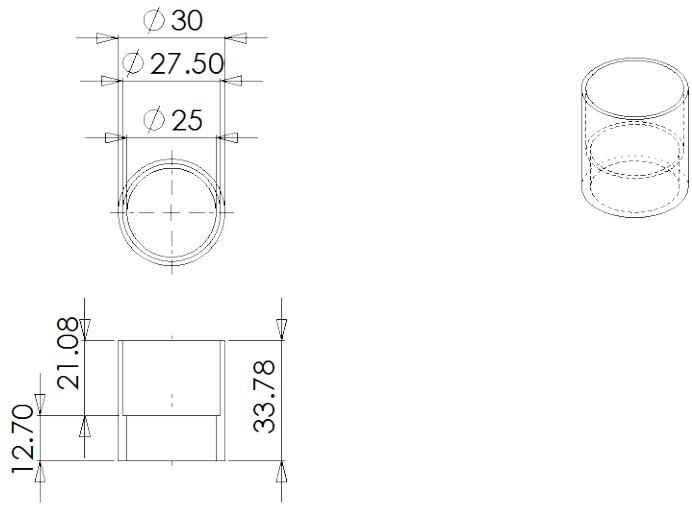

unit	mm
name	airhousing
date	01/18/2013
material	brass
designer	Philipp Klaess

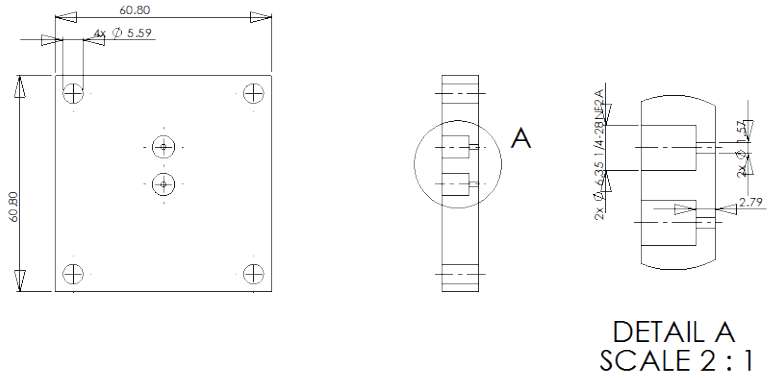

unit	mm
name	baseplate_thread
date	02/11/2013
material	brass
designer	Philipp Klaess

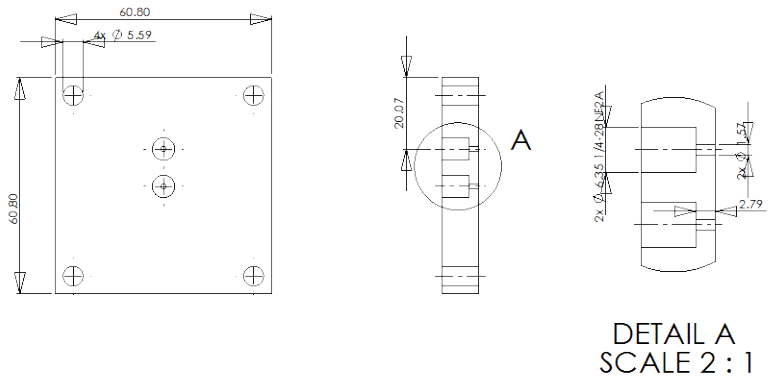

unit	mm
name	baseplate_thread
date	02/11/2013
material	brass
designer	Philipp Klaess

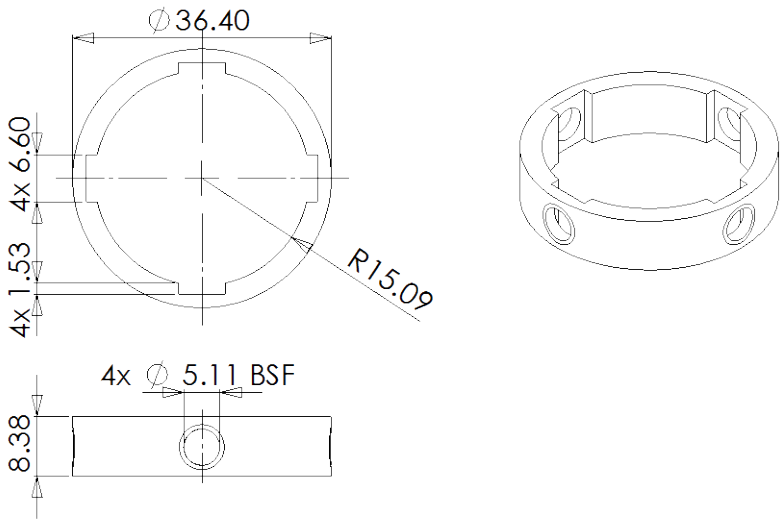

unit	mm
name	collar_ with_thread
date	02/14/2013
material	brass
designer	Philipp Klaess

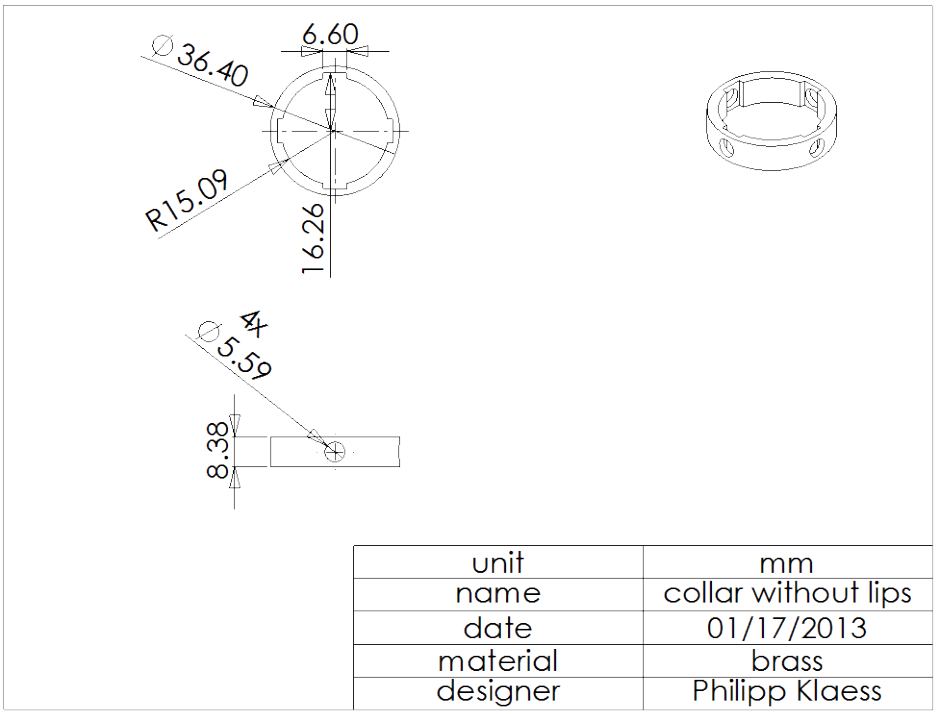
∅36.40
6.60
R15.09
16.26
4x
∅5.59
8.38
unit
mm
name
collar without lips
date
01/17/2013
material
brass
designer
Philipp Klaess

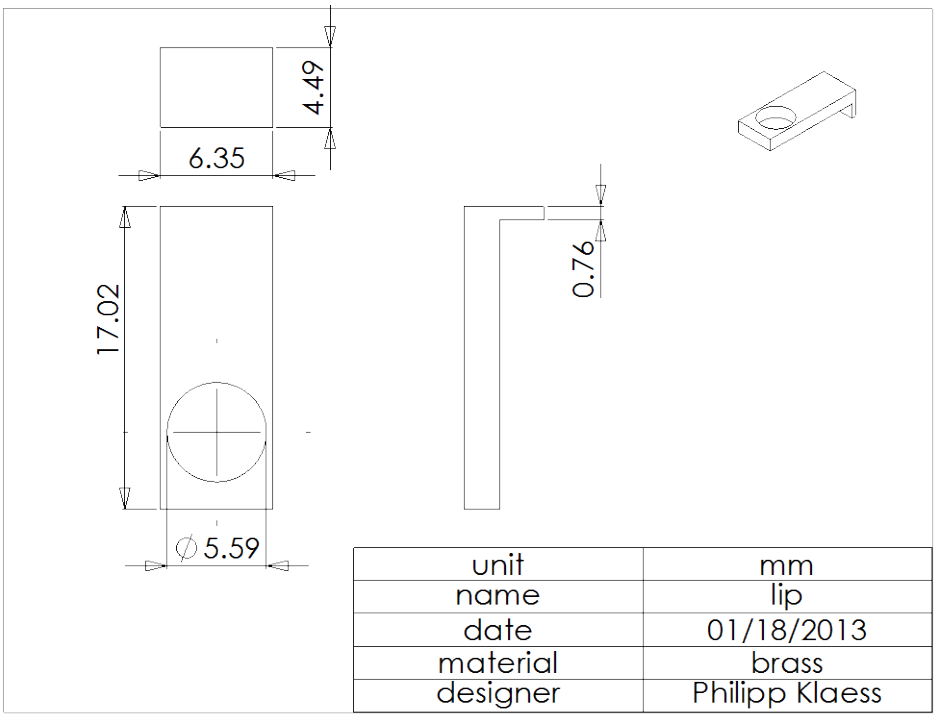
4.49
6.35
17.02
0.76
∅5.59
unit
mm
name
lip
date
01/18/2013
material
brass
designer
Philipp Klaess

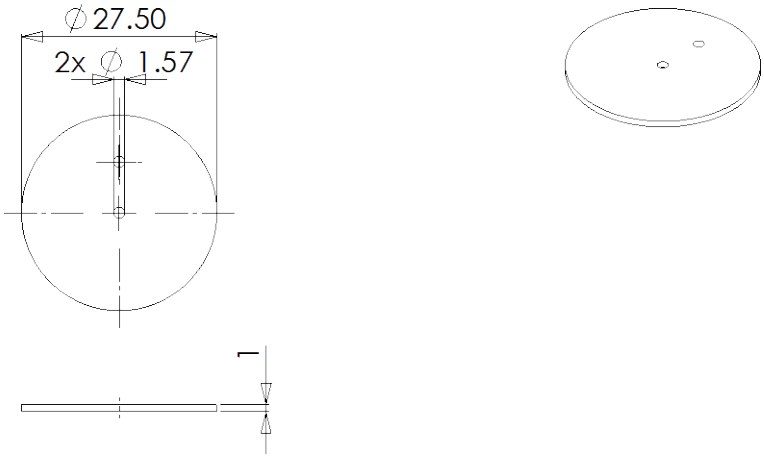

unit	mm
name	screen_small_holes
date	02/12/2013
material	brass
designer	Philipp Klaess

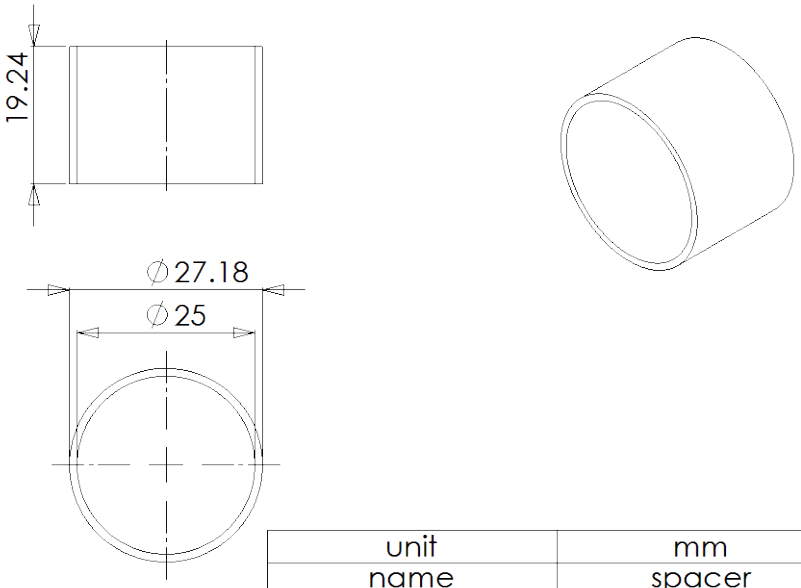

unit	mm
name	spacer
date	12/13/2013
material	brass
designer	Philipp Klaess

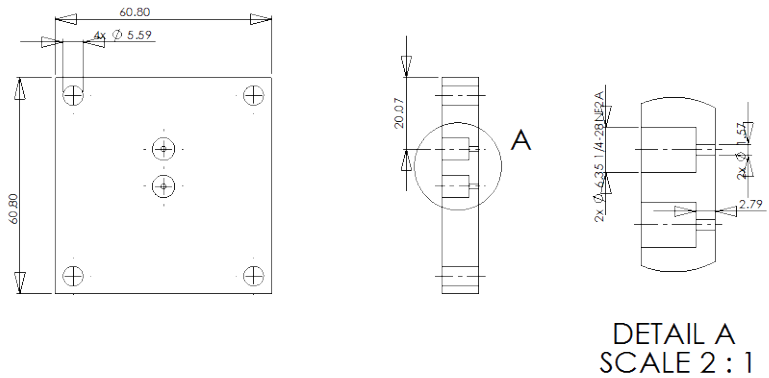

unit	mm
name	baseplate_thread
date	02/11/2013
material	brass
designer	Philipp Klaess

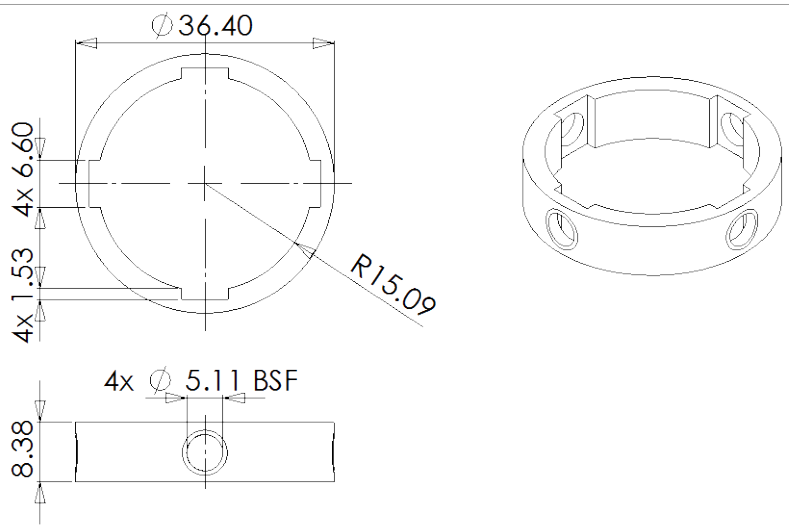

unit	mm
name	collar_ with_thread
date	02/14/2013
material	brass
designer	Philipp Klaess

Appendix E: BRE Radiometer Design Reference

This radiometer concept addresses requirement 3.6.8, wherein the primary objective is to see the flame but not the burner in the radiometer's FOV. Given that the radiometer has a finite detector surface, a simple aperture will not define a boundary between what is visible to invisible. Instead, the aperture combined with the edges of the detector surface defines two FOVs: a smaller FOV which can be seen by the entire surface and a larger FOV which can be seen by at least some of the sensor surface. Therefore, completely excluding the burner from the detector FOV requires that the burner be outside the larger FOV. In this concept, that surface is made parallel to the burner outlet by tipping the radiometer upward, i.e., so that it is aimed downstream of the burner.

A disadvantage of this configuration is that the flame may easily be within the less sensitive portion of the detector's FOV, where it is visible to only a portion of the sensor as in Fig. 10 below. However, it is presumably the only way without a lens to ensure that the FOV doesn't include the burner.

The difference between the two FOVs can be reduced by using a radiometer with a smaller detector surface. However, the sensitivity of the sensor would be diminished which is undesirable.

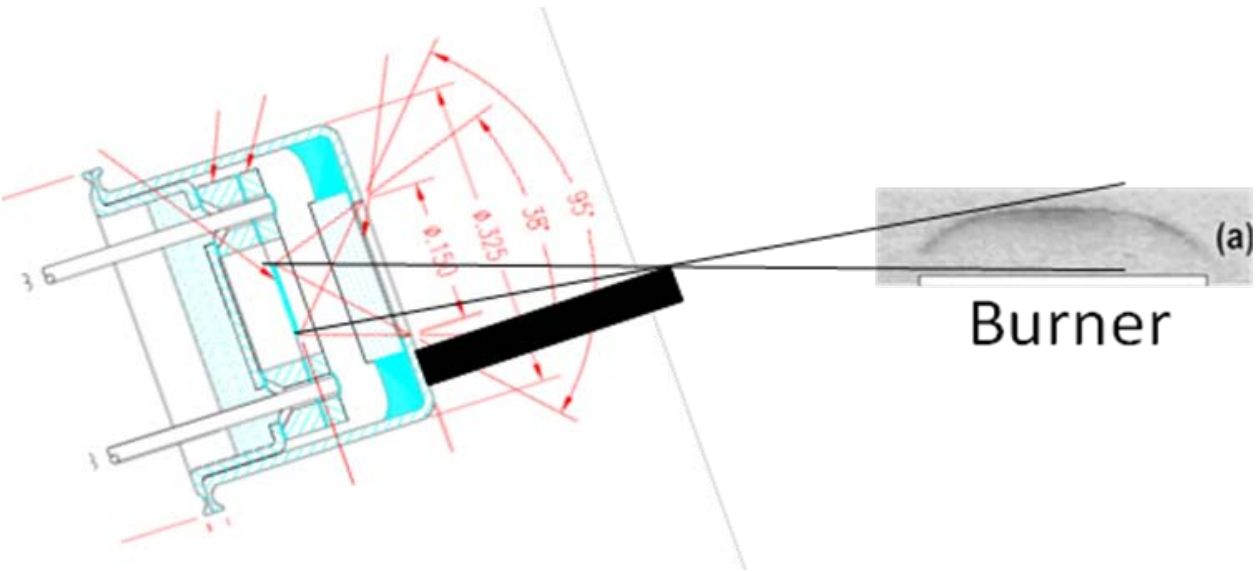

Figure 10. *BRE radiometer concept to see the flame but not the burner, by tilting the radiometer such that the burner outlet is below and parallel to the surface of the outer FOV, which is asymmetrically reduced with an obstruction in this example. However, in this conceptual drawing the flame is entirely within the outer FOV where it is only seen by some of the sensor surface.*