JULY-AUGUST 1953
VOLUME 23 NUMBER 4

JOURNAL OF THE AMERICAN ROCKET SOCIETY

Editor-in-Chief
MARTIN SUMMERFIELD

Take-Off from Satellite Orbit

H. S. TSIEN[1]

Daniel and Florence Guggenheim Jet Propulsion Center, California Institute of Technology, Pasadena, Calif.

The mass ratio or the characteristic velocity for the take-off of a space ship from the satellite orbit is computed for two cases: the radial thrust, and the circumferential thrust. The circumferential thrust is much more efficient in that the required mass ratio is much less than for the radial thrust. Both cases show, however, an increase of the required mass ratio and the characteristic velocity with a reduction in acceleration. With circumferential thrust, the characteristic velocity increases by a factor of two, when the acceleration is reduced from $^1/_2$ g to $^1/_{3000}$ g.

FOR take-off of a rocket from the earth surface, it is convenient to have the initial trajectory in the vertical direction, and then the thrust should be considerably larger than the initial weight of the rocket to overcome the gravity and to give an appropriate acceleration. Depending upon the relative magnitudes of the aerodynamic drag and the weight, the initial ratio of the thrust and the weight should be between 2 and 3 for minimum expenditure of the propellant. The situation is quite different for a space ship taking off from the satellite orbit: In a satellite orbit, the gravitational attraction is completely balanced by the centrifugal force, and the vehicle is effectively in a weightless state. This fact has led many fanciers of interplanetary travel to conclude that take-off from satellite orbit requires only a very minute thrust. For instance, L. Spitzer (1)[2] proposed a nuclear power plant for a space ship to be accelerated at only $^1/_{3000}$ g. Another example is the extensive discussion of interorbital transport techniques by H. Preston-Thomas (2), based upon the assumption of equally small acceleration. On the other hand, W. von Braun (3) seems to prefer a very much larger acceleration of approximately $^1/_2$ g for take-off from the satellite orbit.

The magnitude of the acceleration has a strong bearing on the optimum type of power plant to be used: The ion-beam rocket is only feasible for very small acceleration, while for moderate acceleration, chemical rocket is required. Therefore the question of the magnitude of acceleration is an important one for interplanetary flight. The purpose of this note is to compute the relation between the acceleration and the mass ratio required for escape from the earth's gravitational field, starting from the satellite orbit. It is hoped that the present investigation will give the future generation of astronautical engineers a rational basis for designing space ships.

Received November 19, 1952.
[1] Robert H. Goddard Professor of Jet Propulsion.
[2] Numbers in parentheses refer to the References on page 236

Basic Equations

The problem considered is the motion of a space ship under the influence of the rocket thrust and the gravitational attraction of a single massive body, say the earth. Then if the rocket thrust is in the plane of trajectory, the trajectory of the space ship will remain in a plane. Let the position of the ship at any time instant t be given by the polar co-ordinates r and θ (r is the distance from the center of attraction, and θ the angular position). If the components of the rocket thrust per unit mass of the vehicle are R in the radial direction and Θ in the circumferential direction, and if g is the magnitude of gravitational attraction at the starting satellite orbit $r = r_0$ (Fig. 1), then the equations of motion of the space ship are

$$\frac{d^2r}{dt^2} = R + r\left(\frac{d\theta}{dt}\right)^2 - g\left(\frac{r_0}{r}\right)^2 \quad \text{[1]}$$

and

$$\frac{d}{dt}\left(r^2\frac{d\theta}{dt}\right) = r\,\Theta \quad \text{[2]}$$

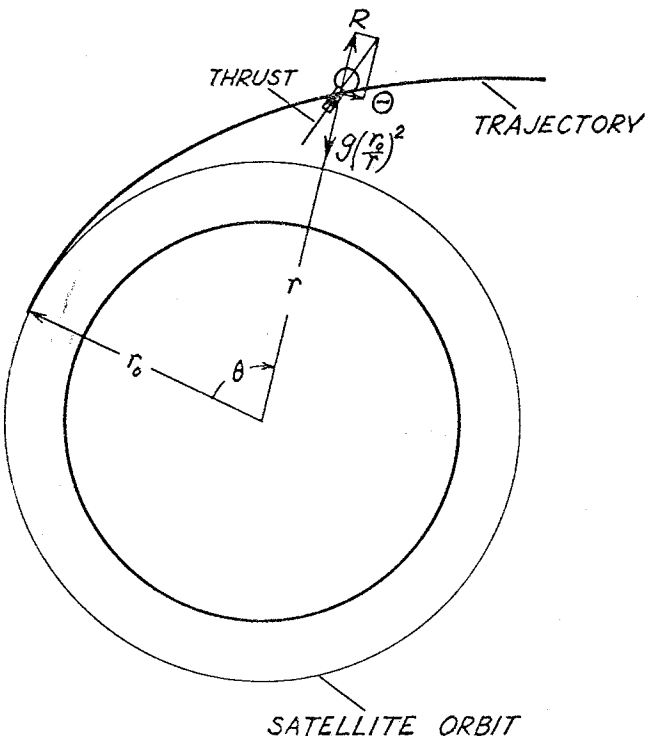

FIG. 1 TAKE-OFF FROM THE SATELLITE ORBIT WITH THRUST IN THE PLANE OF SATELLITE ORBIT

By using the subscript 0 to indicate quantities at the starting instant $t = 0$, the equilibrium condition of the satellite orbit is given by

$$r_0 \left(\frac{d\theta}{dt}\right)_0^2 = g \qquad [3]$$

Initially, the radial velocity is zero, i.e.,

$$\left(\frac{dr}{dt}\right)_0 = 0 \qquad [4]$$

These are the initial conditions.

For the space ship to have sufficient energy to escape the earth gravitational field at the end of the powered flight, the sum of the kinetic energy and potential energy must vanish at the end of the accelerating period. Let that instant be denoted by the subscript 1. Thus, at $t = t_1$

$$\frac{1}{2}\left[\left(\frac{dr}{dt}\right)_1^2 + \left(r\frac{d\theta}{dt}\right)_1^2\right] - g\frac{r_0^2}{r_1} = 0 \qquad [5]$$

With any specified variation of the thrust forces R and Θ as functions of time, the above system of equations determine completely the take-off trajectory of the space ship. In the following sections, two special cases of practical significance will be discussed in detail: the case R = const, $\Theta = 0$, purely radial thrust; and the case $R = 0$, Θ = const, purely circumferential thrust.

Radial Thrust

If the thrust is always radial and is proportional to the instantaneous mass of the vehicle, a nondimensional thrust factor μ can be introduced as

$$R = \mu g \qquad [6]$$

Furthermore, let

$$\rho = \frac{r}{r_0}, \quad \tau = \sqrt{\frac{g}{r_0}}\, t \qquad [7]$$

ρ is thus the nondimensional radial distance, and τ is the nondimensional time. Then Equations [1] and [2] can be written in the nondimensional form as

$$\frac{d^2\rho}{d\tau^2} = \mu + \rho\left(\frac{d\theta}{d\tau}\right)^2 - \frac{1}{\rho^2} \qquad [8]$$

and

$$\frac{d}{d\tau}\left(\rho^2\frac{d\theta}{d\tau}\right) = 0 \qquad [9]$$

Equation [9] can be immediately integrated and by using the initial condition of Equation [3], the result of integration is

$$\frac{d\theta}{d\tau} = \frac{1}{\rho^2} \qquad [10]$$

By substituting this equation into Equation [8], the final equation for ρ is

$$\frac{d^2\rho}{d\tau^2} = \mu + \frac{1}{\rho^3} - \frac{1}{\rho^2} \qquad [11]$$

The nondimensional radial velocity is $d\rho/d\tau$. This is related to the physical radial velocity dr/dt as follows

$$\frac{dr}{dt} = \sqrt{gr_0}\,\frac{d\rho}{d\tau} \qquad [12]$$

Equation [11] can be rewritten as

$$\frac{1}{2}\frac{d}{d\rho}\left(\frac{d\rho}{d\tau}\right)^2 = \mu + \frac{1}{\rho^3} - \frac{1}{\rho^2}$$

Since $d\rho/d\tau = 0$, when $\tau = 0$ and $\rho = 1$ according to Equation [4], the result of integrating the above equation is

$$\left(\frac{d\rho}{d\tau}\right)^2 = 2\mu(\rho - 1) + \left(1 - \frac{1}{\rho^2}\right) - 2\left(1 - \frac{1}{\rho}\right) \qquad [13]$$

Therefore the nondimensional time τ can be calculated as a function of the radius ρ as follows

$$\tau = \int_1^\rho \frac{\rho\, d\rho}{\sqrt{(\rho - 1)(2\mu\rho^2 - \rho + 1)}} \qquad [14]$$

With Equations [10] and [13], the end condition of Equation [5] can be written as

$$\frac{1}{2}\left[\left\{2\mu(\rho_1 - 1) + \left(1 - \frac{1}{\rho_1^2}\right) - 2\left(1 - \frac{1}{\rho_1}\right)\right\} + \frac{1}{\rho_1^2}\right] - \frac{1}{\rho_1} = 0$$

Or simply

$$\rho_1 = 1 + \frac{1}{2\mu} \qquad [15]$$

Then the velocities at the end of acceleration period are

$$\left.\begin{aligned} \left(\frac{dr}{dt}\right)_1 &= \sqrt{gr_0}\,\frac{\sqrt{1 + (1/\mu)}}{1 + (1/2\mu)} \\ \text{and} \qquad & \\ \left(r\frac{d\theta}{dt}\right)_1 &= \sqrt{gr_0}\,\frac{1}{1 + (1/2\mu)} \end{aligned}\right\} \qquad [16]$$

The time τ_1 for the powered flight can be obtained from Equation [14] by setting the upper limit of integration to ρ_1. The result of this integration is[3]

$$\tau_1 = \sqrt{\frac{2}{\mu}}\left[\frac{\sqrt{2(\mu + 1)}}{2\mu + 1} + F\left(\frac{1}{\sqrt{8\mu}}, \cos^{-1}\frac{2\mu - 1}{2\mu + 1}\right) + E\left(\frac{1}{\sqrt{8\mu}}, \cos^{-1}\frac{2\mu - 1}{2\mu + 1}\right)\right] \qquad [17]$$

where F and E are the elliptical integrals of first kind and second kind, respectively.

If $M(t)$ is the instantaneous mass of the space ship, and c the effective exhaust velocity of the rocket, then

$$RM = \mu g M = -c\frac{dM}{dt} = -c\sqrt{\frac{g}{r_0}}\frac{dM}{d\tau}$$

Therefore the mass ratio M_0/M_1 can be calculated as follows:

$$\log_e (M_0/M_1) = \frac{\sqrt{gr_0}}{c}\mu\tau_1$$

By using the result of Equation [17]

$$\frac{c}{\sqrt{gr_0}}\log_e (M_0/M) = \frac{2\sqrt{\mu(\mu + 1)}}{2\mu + 1} + \sqrt{2\mu}\left\{F\left(\frac{1}{\sqrt{8\mu}}, \cos^{-1}\frac{2\mu - 1}{2\mu + 1}\right) + E\left(\frac{1}{\sqrt{8\mu}}, \cos^{-1}\frac{2\mu - 1}{2\mu + 1}\right)\right\} \qquad [18]$$

When the acceleration is very large, $\mu \gg 1$, the integrand in Equation [14] can be expanded in terms of this parameter. Then the mass ratio is calculated as

$$\frac{c}{\sqrt{gr_0}}\log_e(M_0/M_1) = 1 + \frac{1}{24\mu^2} - \frac{1}{40\mu^3} + \ldots \qquad [19]$$

The relation of Equations [18] and [19] is plotted in Fig. 2. For $\mu = 1/8$, the mass ratio becomes infinite. The reason is that at this value of acceleration, there is a radial position where the thrust force is equal to the gravitational attraction and no further increase in the energy of the vehicle can occur. Therefore the radial thrust per unit mass, if maintained constant throughout the powered flight, should be larger than $1/8$ g. With increasing thrust, the required mass ratio for es-

[3] The author is indebted to Dr. Y. T. Wu who kindly supplied the relation of Equation [17].

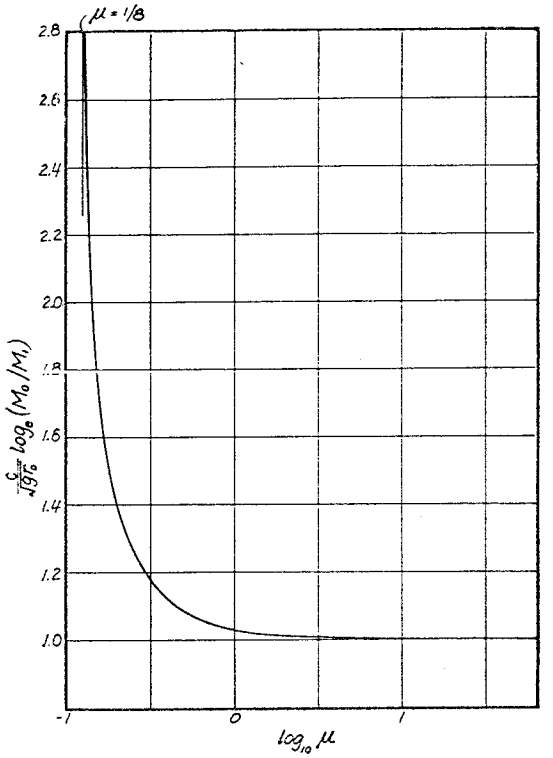

FIG. 2 MASS RATIO FACTOR $(c/\sqrt{gr_0})\ \log_e\ (M_0/M_1)$ AGAINST ACCELERATION FACTOR μ FOR RADIAL THRUST. c, EFFECTIVE EXHAUST VELOCITY; g, GRAVITY AT THE SATELLITE ORBIT OF RADIUS r_0; M_0, INITIAL MASS; M_1, FINAL MASS; μ, THE RATIO OF INSTANTANEOUS THRUST PER UNIT MASS AND g FOR RADIAL THRUST

rape from the earth's gravitational field decreases. This strong dependence of the mass ratio upon the acceleration factor is contrary to opinion that for take-off from satellite orbit only very small thrust is required. The asymptotic value of $\log_e\ (M_0/M_1)$ is $\sqrt{gr_0}/c$. However, there is no appreciable improvement in going to higher thrust than 1 g.

Equation [16] shows that at very large values of the acceleration factor μ, the acceleration is accomplished in so short an interval that the circumferential velocity at the end of the acceleration remains at the initial value of $\sqrt{gr_0}$. The radial velocity increases from nothing at the initial instant to the final value of $\sqrt{gr_0}$. The total kinetic energy is thus gr_0 at the end of acceleration and this is equal to the negative of potential energy at that instant, since the radial position r must be practically the initial value r_0 under very large thrust. The work of the rocket is to produce the radial velocity $\sqrt{gr_0}$. Thus it is evident that the value of $c\ \log_e\ (M_0/M_1)$ must be $\sqrt{gr_0}$, as the calculation shows.

Circumferential Thrust

If the thrust is always circumferential and proportional to the mass of the vehicle, then a new thrust factor ν can be introduced such that

$$\Theta = \nu g \qquad [20]$$

By using the same nondimensional variables as defined in Equation [6], the equations of motion are

$$\frac{d^2\rho}{d\tau^2} = \rho\left(\frac{d\theta}{d\tau}\right)^2 - \frac{1}{\rho^2} \qquad [21]$$

$$\frac{d}{d\tau}\left(\rho^2\frac{d\theta}{d\tau}\right) = \nu\rho \qquad [22]$$

The initial conditions of Equation [3] and [4] are

$$\left(\frac{d\theta}{d\tau}\right)_0 = 1, \quad \left(\frac{d\rho}{d\tau}\right)_0 = 0 \quad \text{at} \quad \rho = 1,\ \tau = 0 \qquad [23]$$

Therefore, Equation [21] gives another initial condition that

$$\left(\frac{d^2\rho}{d\tau^2}\right)_0 = 0 \qquad [24]$$

By eliminating θ from Equations [21] and [22]

$$\frac{d}{d\tau}\left(\rho^3\frac{d^2\rho}{d\tau^2} + \rho\right)^{1/2} = \nu\rho \qquad [25]$$

This is a third-order differential equation with three initia conditions specified by Equations [23] and [24]. No simple general solution can, however, be obtained. The following discussion will be concerned with the approximations that are valid for large values of ν or for small values of ν.

For very large values of ν, the acceleration period is expected to be short and the change of the radial position to be small. Then the value of ρ must be very close to the initial value of unity. By taking ρ to be unity, Equation [25] becomes

$$\frac{d}{d\tau}\left(\frac{d^2\rho}{d\tau^2} + 1\right)^{1/2} = \nu$$

Then

$$\frac{d^2\rho}{d\tau^2} + 1 = C^2 + 2C\nu\tau + \nu^2\tau^2$$

where C is the integration constant. C, however, must be 1 because of the initial condition of Equation [24]. The appropriate approximate solution for ρ for very large ν is thus

$$\rho \cong 1 + \frac{1}{3}\nu\tau^3 + \frac{1}{12}\nu^2\tau^4 \qquad [26]$$

To obtain higher terms in this power series, the usual series substitution method may be used. The calculation is somewhat lengthy and therefore will not be reproduced there. The result is

$$\rho = 1 + \frac{1}{3}\nu\tau^3 + \frac{1}{12}\nu^2\tau^4 - \frac{\nu}{60}\tau^5 - \frac{23\nu^2}{360}\tau^6 + \ldots \qquad [27]$$

By using the result of Equation [27], the radial velocity is obtained by differentiation. Then Equation [21] gives the circumferential velocity. The end condition of Equation [5] can be modified into the following more convenient form by mulitiplying it by $2r^2$

$$0 = \left[\left(\rho\frac{d\rho}{d\tau}\right)^2 + \left(\rho^2\frac{d\theta}{d\tau}\right)^2 - 2\rho\right]$$

By substituting the solution of Equation [27] into this condition, an equation for determining τ_1 is obtained

$$0 = -1 + 2\nu\tau_1 + \nu^2\tau_1^2 - \frac{2}{3}\nu\tau_1^3 + \nu^2\tau_1^4 + \frac{\nu}{30}(1 + 26\nu^2)\tau_1^5 - \frac{\nu^2}{90}(4 - 13\nu^2)\tau_1^6 + \ldots \qquad [28]$$

The mass ratio M_0/M_1 can be calculated in the same way as in the previous section and can be determined through the new parameter x defined as follows

$$\frac{c}{\sqrt{gr_0}}\log_e\ (M_0/M_1) = \nu\tau_1 = x \qquad [29]$$

Equation [28] then can be written as

$$0 = -1 + 2x + x^2 - \frac{2}{3}\frac{x^3}{\nu^2} + \frac{x^4}{\nu^2} + \frac{x^5}{30\nu^4} + \frac{13}{15}\frac{x^5}{\nu^2} - \frac{2}{45}\frac{x^6}{\nu^4} + \frac{13}{90}\frac{x^6}{\nu^2} + \ldots \qquad [30]$$

Since the calculation is designed for large values of ν, the appropriate expansion of x should be a series in inverse powers ν. Equation [30] suggests specifically

$$x(\nu) = x^{(0)} + \frac{x^{(1)}}{\nu^2} + \frac{x^{(2)}}{\nu^4} + \ldots \qquad [31]$$

where $x^{(0)}$, $x^{(1)}$, and $x^{(2)}$ are constants independent of ν. By

substituting Equation [31] into Equation [30] and equating equal powers of ν, the following set of equations results.

$$x^{(0)2} + 2x^{(0)} - 1 = 0 \qquad [32]$$

$$x^{(1)} = \frac{1}{2(1 + x^{(0)})}\left[\frac{2}{3}x^{(0)3} - x^{(0)4} - \frac{13}{15}x^{(0)5} - \frac{13}{90}x^{(0)6}\right] \qquad [33]$$

$$x^{(2)} = \frac{1}{2(1 + x^{(0)})}\left[-x^{(1)2} + 2x^{(0)2}x^{(1)} - 4x^{(0)3}x^{(1)} - \frac{1}{30}x^{(0)6} - \frac{13}{3}x^{(0)4}x^{(1)} + \frac{2}{45}x^{(0)6} - \frac{13}{15}x^{(0)5}x^{(1)}\right] \qquad [34]$$

The explicit numerical solutions are then

$$\begin{aligned} x^{(0)} &= \sqrt{2} - 1 = 0.41421 \\ x^{(1)} &= 0.002349 \\ x^{(2)} &= -0.00004791 \end{aligned} \qquad [35]$$

This completes the calculation of mass ratio for large values of the acceleration factor ν.

For the other extreme case of very small values of ν, it is to be expected that the acceleration will be very small, and in Equation [25] the term $\rho^3 d^2\rho/d\tau^2$ will be very much smaller than ρ. Therefore a good approximation of Equation [25] at small ν is

$$\frac{d}{d\tau}\rho^{1/2} = \nu\rho \qquad \text{or} \qquad \frac{1}{2}\frac{d\rho}{\rho^{3/2}} = \nu\, d\tau$$

The solution of this equation with the initial condition of $\rho = 1$ at $\tau = 0$ is

$$\rho = \frac{1}{(1 - \nu\tau)^2} \qquad [36]$$

Therefore

$$\frac{d\rho}{d\tau} = \frac{2\nu}{(1 - \nu\tau)^3}, \quad \frac{d^2\rho}{d\tau^2} = \frac{6\nu^2}{(1 - \nu\tau)^4} \qquad [37]$$

At $\tau = 0$, the radial velocity and the radial acceleration are thus not zero, as required by the initial conditions of Equations [23] and [24]. They are, however, very small, because ν is very small. Therefore the solution of Equation [36] is a good approximation to the exact solution.

To the same approximation, Equation [20] becomes

$$\rho\frac{d\theta}{d\tau} = \frac{1}{\rho^{1/2}} = (1 - \nu\tau) \qquad [38]$$

This means that at every instant, because of the extremely small acceleration, the centrifugal force per unit mass $r(d\theta/dt)^2$ practically balances the gravitational attraction. The end condition of Equation [5] can then be written as

$$\frac{4\nu^2}{(1 - x)^6} - (1 - x)^2 = 0 \qquad [39]$$

where x is again $\nu\tau_1$. The appropriate solution for x is then

$$x = 1 - (2\nu)^{1/4} \qquad [40]$$

Since the mass ratio, M_0/M_1, is related to x by Equation [29], Equation [40] actually gives the mass ratio for escaping the gravitational field with very small acceleration.

The parameter x is plotted against ν in Fig. 3, using Equation [31] with both Equations [35] and [40]. When ν approaches zero, x approaches 1. When ν is very large, x approaches $\sqrt{2} - 1$. As ν increases, x and hence the mass ratio, M_0/M_1, decrease monotonically. Therefore, same as the result for purely radial thrust, there is a strong influence of the magnitude of acceleration on the required mass ratio. However, as far as decreasing the mass ratio is concerned, there is no appreciable advantage in using ν greater than $^1/_2$.

When the acceleration factor ν is very large, the thrust force acts like an impulse. Since the thrust is in the circumferential direction, the rocket action only produces an increase in the circumferential velocity with practically no change in the radial position. The initial circumferential velocity is $\sqrt{gr_0}$ the required circumferential velocity for escape is $\sqrt{2gr_0}$. Thus the increase of velocity produced by the rocket action is $(\sqrt{2} - 1)\sqrt{gr_0}$. This explains the asymptotic value of x for very large ν.

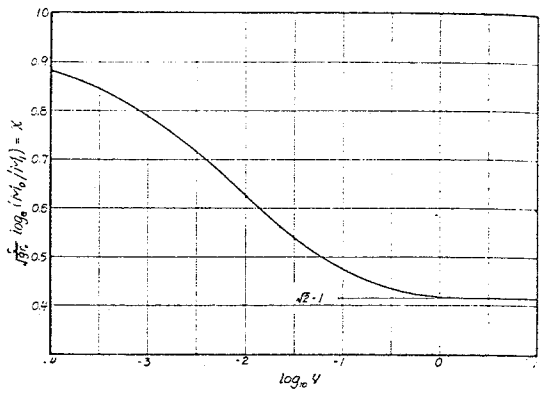

FIG. 3 MASS RATIO FACTOR $(c/\sqrt{gr_0}) \log_e (M_0/M_1)$ AGAINST ACCELERATION FACTOR ν FOR CIRCUMFERENTIAL THRUST. c, EFFECTIVE EXHAUST VELOCITY; g, GRAVITY AT THE SATELLITE ORBIT OF RADIUS r_0; M_0 INITIAL MASS; M_1, FINAL MASS; ν, THE RATIO OF INSTANTANEOUS THRUST PER UNIT MASS AND g FOR CIRCUMFERENTIAL THRUST

Discussion

By comparing Fig. 2 with Fig. 3, it is apparent that the radial thrust is much less efficient than the circumferential thrust for take-off from the satellite orbit. For large thrusts, the value of log (M_0/M_1) for radial thrust is more than twice that for circumferential thrust. Furthermore, in case of radial thrust, the ratio of thrust to the instantaneous mass, if maintained constant, must be larger than $g/8$. In case of circumferential thrust, no such limit exists. Therefore, circumferential thrust is definitely preferred.

The quantity $c \log_e (M_0/M_1)$ is a measure of the performance or the capability of the vehicle. It has the dimension of a velocity and is actually the increase of velocity which the vehicle is capable of in a space without gravitation. This quantity is conveniently called the *characteristic velocity* of the vehicle. Let this be denoted by V. Then for the case of circumferential thrust, Equation [29] gives

$$V = c \log_e (M_0/M_1) = \sqrt{gr_0}\, x = \frac{S}{\sqrt{2\lambda}}\, x \qquad [41]$$

where S is the "escape velocity" from the surface of the earth, and λ is the ratio of the radii of the satellite orbit and the earth. S is equal to 11.2 km/sec. Fig. 3 then shows that by decreasing the acceleration from $^1/_2$ to $^1/_{3000}$ g, x, hence the required characteristic velocity V, will increase by a factor of two. This is a very important point for the designers of space ships.

References

1 "Interplanetary Travel Between Satellite Orbits," by L. Spitzer, Jr., JOURNAL OF THE AMERICAN ROCKET SOCIETY, vol. 22, March–April 1952, pp. 92–96.

2 "Interorbital Transport Techniques," by H. Preston-Thomas, *Journal of the British Interplanetary Society*, vol. 11, 1952, pp. 173–193.

3 "Man on the Moon, the Journey," by W. von Braun, *Collier's*, Oct. 18, 1952, p. 52.