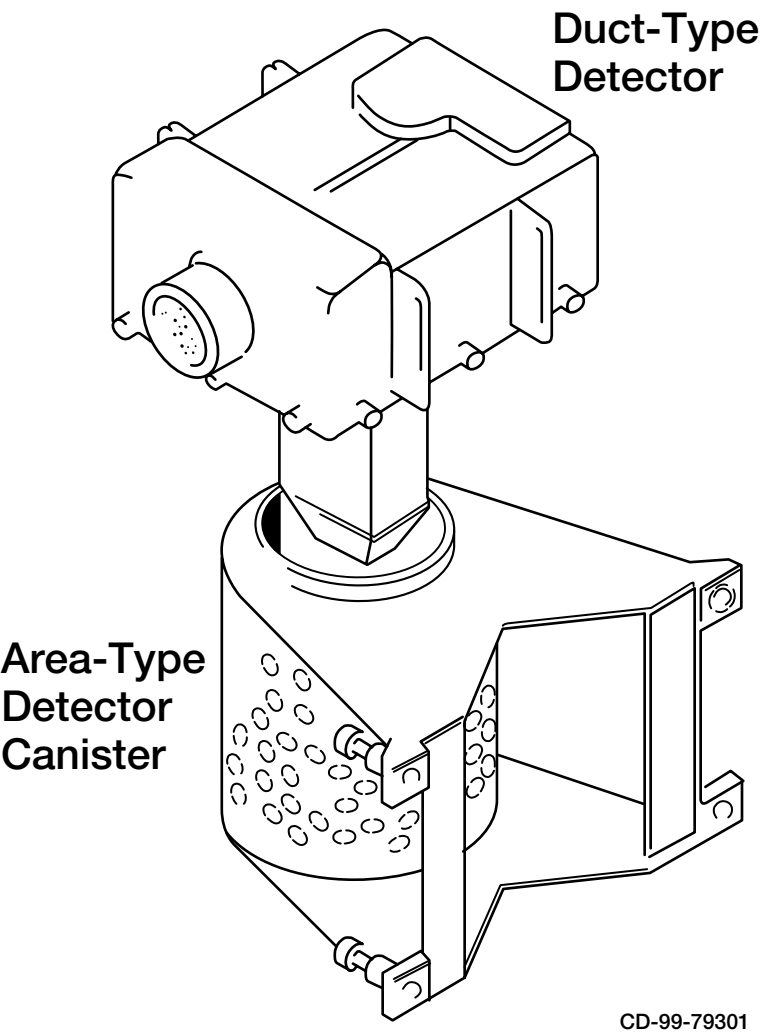
Duct-Type
Detector
Area-Type
Detector
Canister
CD-99-79301