Research Center

Water Vapor Imaging System

Hardware Schematic

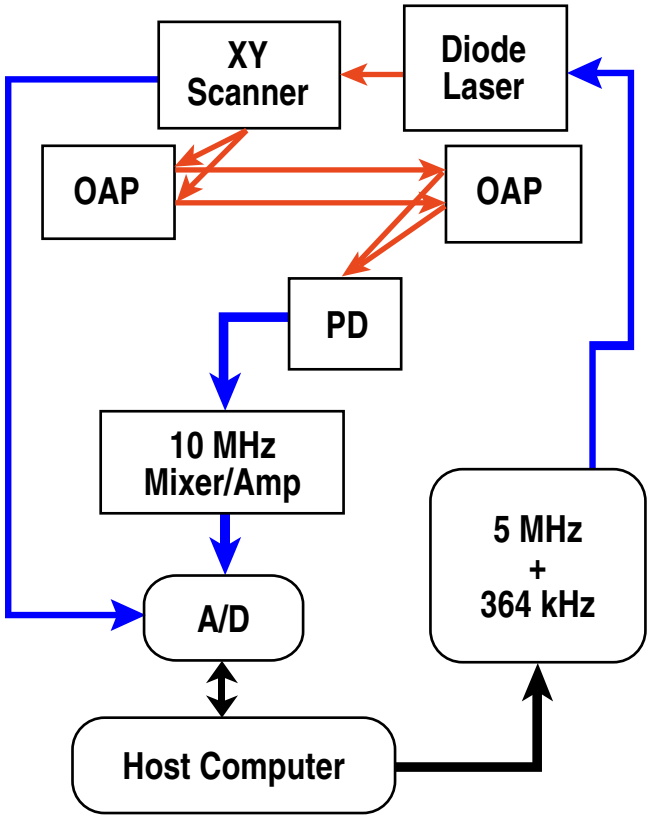

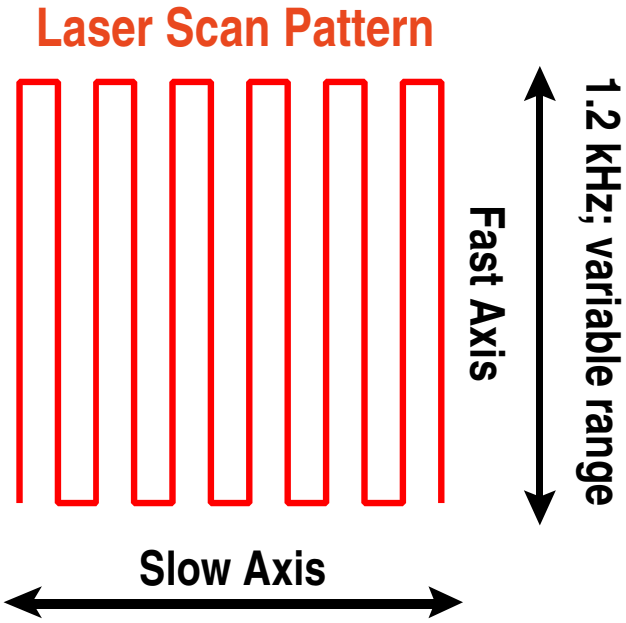

Variable frequency and variable range

System resolution laser beam limited